海菱
® HIGHLEAD

DY-85系列

直驱式一体控制自动剪线

上下复合送料平缝机

Integrated Direct Drive Top And Bottom Feed Lockstitch Sewing Machine With Long Stitch Length And Electronic Control

使用说明书

Instruction Manual

零件样本

Parts Catalog

上 海 标 准 海 菱 缝 制 机 械 有 限 公 司
SHANGHAI BIAOZHUN HAILING SEWING MACHINERY CO., LTD.

WWW.VISKASIUVMUI.LT

-----目录 CONTENTS -----

一、使用说明 INSTRUCTION MANUAL

1. 注意事项 PRECAUTIONS BEFORE STARTING OPERATION ……1
2. 技术规格 SPECIFICATIONS……2
3. 操作准备和润滑 PREPARATION AND LUBRICATION ……2
4. 调整针杆停针位置 PREPARETION BEFORE START TO OPERATE ……4
5. 机针安装 HOW TO ATTACH NEEDLE ……5
6. 穿线 THREADING ……5
7. 针距、倒顺送料 SET STITCH LENGTH AND REVERSE FEEDING……6
8. 压紧杆高度定位 POSITION PRESSER BAR……6
9. 压脚压力调节 ADJUST THE PRESSURE OF PRESSER FOOT ……7
10. 挑线簧调节 ADJUST THREAD TAKE-UP SPRING……7
11. 底面线张力调节 ADJUST THREAD GUIDE AND THREAD TENSION ……8
12. 机针与旋梭同步调节 TIME NEEDLE TO ROTAING HOOK…… 10
13. 旋梭装卸 REPLACE ROTATING HOOK…… 11
14. 梭心线的绕法 HOW TO WIND THE LOWER THREAD ON THE BOBBIN …… 12
15. 松线器挺线调节 ADJUST OPENING TIME OF THE TENSION DISCS …… 13
16. 送布牙的调整 ADJUST THE HEIGHT OF FEED DOG …… 13
17. 调整送布牙倾角 ADJUSTMENT OF FEED DOG INCLINATION…… 14
18. 送布牙与机针同步调节 TIME FEED MOTION TO NEEDLE MOTION …… 14
19. 剪线装置的调整 ADJUSTMENT OF THREAD TRIMMER MECHANISM…… 15
20. 定期清扫 PERIODICAL CLEANING…… 17

二、零件样本 PARTS CATALOG

A) 机壳部件 ARM BED AND IT'S ACCESSORIES …… 18
B) 针杆、上轴部件 NEEDLE BAR & ARM SHAFT MECHANISM …… 21
C) 针距调节部件 STITCH REGULATOR MECHANISM …… 24
D) 送料、抬牙部件 FEEDING AND FEED LIFTING MECHANISM…… 26
E) 压脚部件 PRESSER FOOT MECHANISM…… 28
F) 压脚提升、摆动部件 PRESSER LIFTING & FEEDING MECHANISM …… 30
G) 润滑部件 OIL LUBRICATION MECHANISM …… 33
H) 剪线部件 THREAD TRIMMER MECHANISM…… 35
I) 倒缝、上轮部件 TOUCH BACK MECHANISM & MOTOR MECHANISM …… 38
J) 气动抬压脚(特殊订货) PNEUMATIC PRESSER FOOT（SPECIAL ORDER) …… 40
K) 附件 ACCESSORIES…… 42

WWW.VISKASIUVIMUI.LT

1. 注意事项 PRECAUTIONS BEFORE STARTING OPERATION

1) 安全须知 Safety precautions

(1) 打开电源后，切勿将手放在机针下和上轮附近。

(2) 机器停止使用或操作者离开时，将电源关掉。

(3) 当倾斜机头或重新调试安装机器时，必须切断电源。

(4) 机器运转时避免手指、头发、棒状物等靠近绕线轮，以免受伤。

(5) 机器运转时，不要将手指放在挑线杆防护罩内以及机针、上轮附近。

(6) 如果安装了压脚防护罩、透明有机玻璃罩，当在这些防护装置不完善时不要开机。

(1) When turning the power on, keep your hands and fingers away from the area around/under the needle and the area around the pulley.

(2) Power must be turned off when the machine is not used.

(3) The power must be turned off before tilting the machine head, installing or adjusting the machine, or when replacing.

(4) Avoid placing fingers, hairs bars etc. nears the pulley, bobbin winder pulley, when the machine is operation. Injury could result.

(5) Do not insert fingers into the thread take-up cover, under/round the needle, or pulley when the machine is in operation.

(6) If a mini motor cover, finger guard, and/or eye guard are installed, do not operate the machine without these safety devices.

2) 开机须知 Precaution before Starting Operation

(1) 开机前，先将储油盒内的油加足。

(2) 若机器是通过油壶加油润滑，操作前须加油充分润滑。

(3) 启动新机器时，须先接通电源，检查上轮的旋转方向。
(观测者面对上轮，上轮应为逆时针方向旋转)

(1) If the machine's oil pan has an oil sump, never operate the machine before filling it.

(2) If the machine is lubricated by a drop oiler , never operate the machine before lubricating.

(3) When a new sewing machine is first turned on, verify the rotational direction of the pulley with the power on. (The pulley should rotate counterclockwise when viewed from the pulley.)

3) 操作条件 Precaution for Operating Conditions

(1) 不要在高于 35℃或低于 5℃时使用，否则会造成机器损坏。

(2) 避免在肮脏的环境中使用机器。

(1) Avoid using the machine at abnormally high temperature (35℃ or higher) or low temperatures (5℃ or lower). Otherwise, machine failure may result.

(2) Avoid using the machine in dusty conditions.

WWW.VISKASSIUVIMUI.LT

2. 技术规格 SPECIFICATIONS

型号 Model		DY-850	DY-851
最高转速 Max. speed		2000r.p.m （针距 Stitch length ≥10mm ： 1800r.p.m）	2000r.p.m
针距 Stitch length		0 － 12mm	0 － 8mm
针杆行程 Needle bar stroke		38mm	
压脚提升高度 Presser foot lift	手动 Hand	6 mm	
	膝控 Knee	13 mm	
机针 Needle type		DP×17 #18~#22	
旋梭 Rotating hook		自动润滑大旋梭 Auto lubricated large hook for trimmer	
润滑方式 Lubrication		自动润滑 Auto lubricated	
操作空间 Operating space		330×130mm	
电动机 Motor		220 伏 750 瓦伺服电机 220V750W Servo motor	

3. 操作准备和润滑 PREPARATION AND LUBRICATION

1）擦拭机器 Cleaning the machine

机头装箱前为了防止机件生锈，各部分均涂有较厚的防锈油脂，同时机头装箱后，还可能在较长的贮藏和长途运输阶段造成油脂硬化和积聚在机器表面的灰尘，所以必须将表面的油脂和灰尘用汽油和洁净的软布擦拭干净。

Before leaving the factory, the machine parts are coated with rust-preventive grease, which may be hardened and contaminated by dust during storage and shipment. This grease must be removed with gasoline.

2）检查 Examination

机器出厂时，虽经过周密的检查和试验，但在长途运输中也可能受到强烈的振动使机件松动或歪曲，所以应该作一次周密的检查，并用手转动主动轮，看机件之间有无转动困难，碰撞现象或其它不均匀的阻力，不正常的声响，如有应作适当的调整，机器情况正常后才可正式试车。

Though every machine is confirmed by strict inspection and test before leaving the factory, the machine parts may be loose or deformed after long distance transportation with jolt. A thorough examination must be performed after cleaning the machine. Turn the balance wheel to see if there is running obstruction, parts collision, uneven resistance or abnormal noise. If these exist, adjustment must be made accordingly before run-in operation.

WWW.VISKASSIUVIMAI.LT

3）润滑 Oiling

（1）油量

油量必须按油盘内标记加注。图中标记 A 是油量最高位，B 是油量最低位。注意油量不得低于标记 B，否则缝纫机各部位就会出现进油停止，造成发热咬死情况。

（2）加油

必须用特 18#高速缝纫机油，运转前油量加至标记 A。

（3）换油

旋下放油螺钉 C，排净废油。清扫油盘污尘，旋紧放油螺钉 C，加注新油。

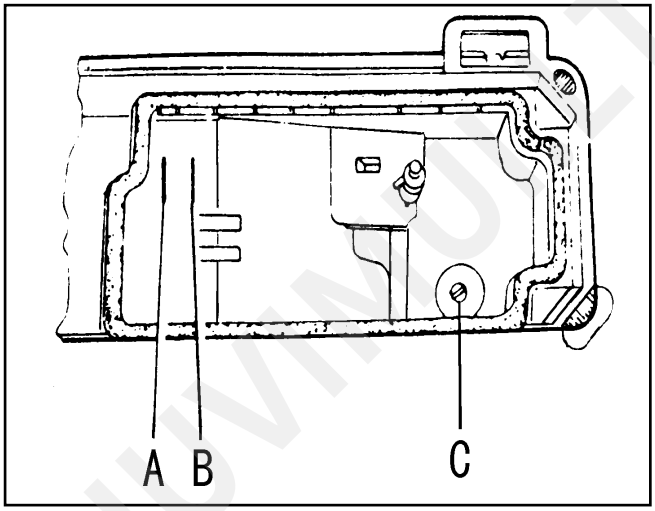

(1) Amount of oil

Required amount of oil. Line (A) on the oil reservoir: Max. oil level. Line (B) on the oil reservoir: Min. oil level. If oil level goes down under line (B), oil cannot be distributed to each part of the machine, thus causing the parts a seizure.

(2) Replenishing

Always use only No.18 special machine oil for high speed sewing. Be sure to replenish oil to Line (A) before starting operation.

(3) Replacing oil

To replace oil, remove Screw (C) to drain oil. After completely draining off oil, clean the oil reservoir and securely tighten Screw (C), then fill the reservoir with fresh oil.

4）试车 Run-in operation

新机器在开始使用和长期搁置重新使用时，先卸下机头上部的橡皮塞 A，充分加油，然后抬起压脚 B 进行低速运转 1000-1500 针/分，并观察油窗 C 的喷油情况，润滑正常后，仍须保持低速 30 分钟运转试验，以后逐渐提高缝纫速度。经过一个月左右的使用，使机器充分跑合。然后根据工作的性质再提高到最高转速。

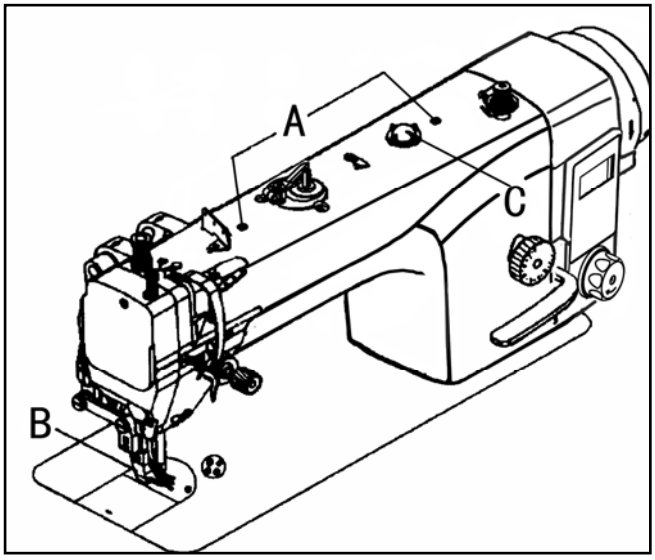

Run-in operation is required for a new sewing machine, or a sewing machine left out operation for a considerable length of time. Remove Rubber Plugs (A) on the top of the arm and replenish sufficient amount of oil. Lift Presser Foot (B). Run the machine

WWW.VISKASEWING.COM

at a low speed (1000-1500spm) to check oil distributing condition through Oil Check Window (C). Perform run-in operation at 1000-1500spm for 30minutes. After a lapse of one month of service during which the working speed is increased gradually and the machine runs sufficiently well, the high speed 2000spm can be adopted according to the nature of the work.

5） 调整旋梭供油量 Adjusting the lubrication of rotating hook

旋梭的油量，可以用油量调节螺钉 A 加以调节。顺时针方向（“+”号方向）转动油量调节螺钉 A，油量增多；逆时针方向（“-”号方向）转动油量调节螺钉，则油量减少，油量调节螺钉 A 在回转 5 圈范围内调节油量，拧向紧固位置时，油量最多，拧松转 5 圈时，油量最少。

The lubrication of the rotating hook can be adjusted by Oil Adjusting Screw (A) as follows: Turn Oil Adjusting Screw (A) clockwise (+) to increase oil and turn Oil Adjusting Screw (A) counterclockwise (-) to decrease oil. Oil Adjusting Screw (A) adjusts oil amount within 5 turns. When Oil Adjusting Screw (A) is fully tightened, oil amount is maxi mum. Readjustment depends on temperature, sewing speed and the like. In practice, oil amount can be judged as follows: remove the throat plate and place a piece of paper on instead, run the machine for about 20 seconds, then check the oil splashed on the paper.

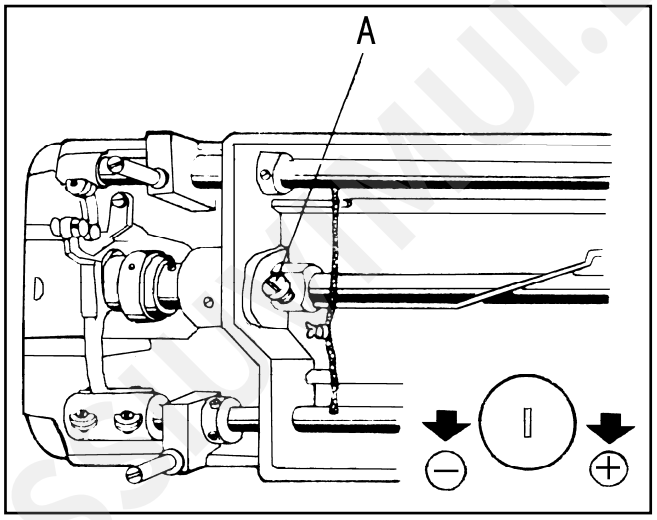

4. 调整针杆停针位置 PREPARETION BEFORE START TO OPERATE

调整上针位 Adjustment of needle bar stop position Adjust of "UP" position

踩下脚踏板，查看机器是否停在上停针位，如果标记 A 偏转超过 3mm，则按附件：AHE-58/59 数控交流伺服系统 HMI-12 使用说明书，第 8 页—4.1 上停针位调整，所示步骤进行调整。

When the pedal is kicked down by heel, the machine stops at "UP" position. If the marks deviate larger than 3mm adjust as follows.

Enclosure: AHE-58/59 AC Servo System HMI-12 User Manual, No.8—4.1 The adjustment of up needle stop position, to adjust as the items.

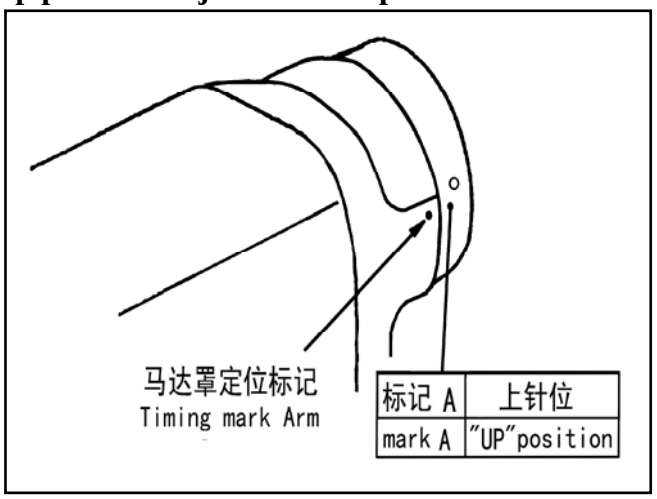

5. 机针安装 HOW TO ATTACH NEEDLE

注意:安装前必须关闭电源

旋松夹针螺钉，将机针的长槽朝向操作者的左面，然后把针柄插入针杆下部的针孔内，使其碰到针杆孔的底部为止，再旋紧夹针螺钉，固定机针即可。

注意：倒缝时如发生断线现象，注意机针与线的配合，并且使机针的长槽面向操作者转动一定角度。

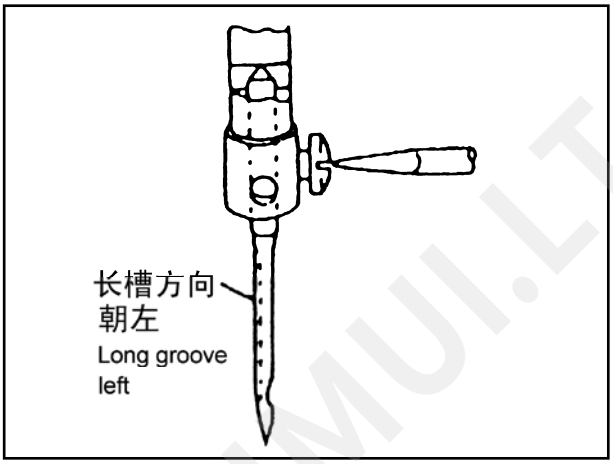

Note: Before making the following adjustment, be sure to switch off the power source.

Insert the needle up to the bottom of needle clamp and tighten the screw keeping the long groove side of needle forward the left.

Note: If snapping of thread occurs during back sewing with polyester threads，it may be avoided by fitting the needle with the long groove shifted to the front side.

6. 穿线 THREADING

挑线杆在最高位置时，按下图所示序号穿线。引底线时，先将面线头捏住，转动主动轮使针杆向下运动，再回升到最高位置，然后拉起捏住的面线线头，底线即被牵引上来。最后将底面二根线头一起置于压脚下前方。

Raise the thread take-up lever to its highest position and thread the upper thread in the following order. To draw the bobbin thread, hold the end of the needle thread and turn the balance wheel to lower the needle bar and then to lift it to its highest position. Pull the needle thread and the bobbin thread is drawn up. Put the ends of needle thread and bobbin thread front ward under presser foot.

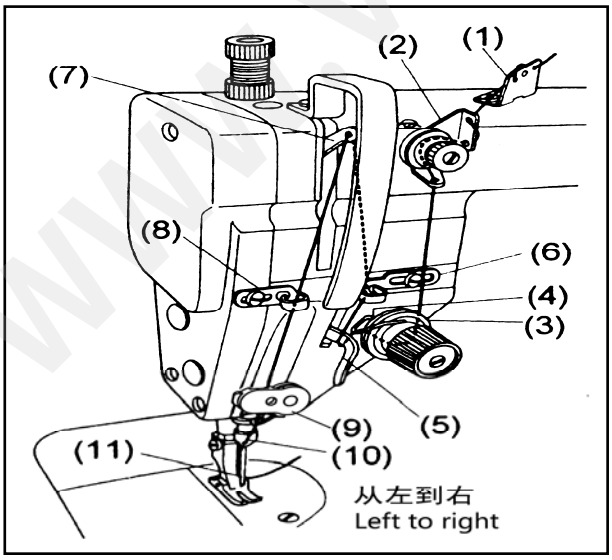

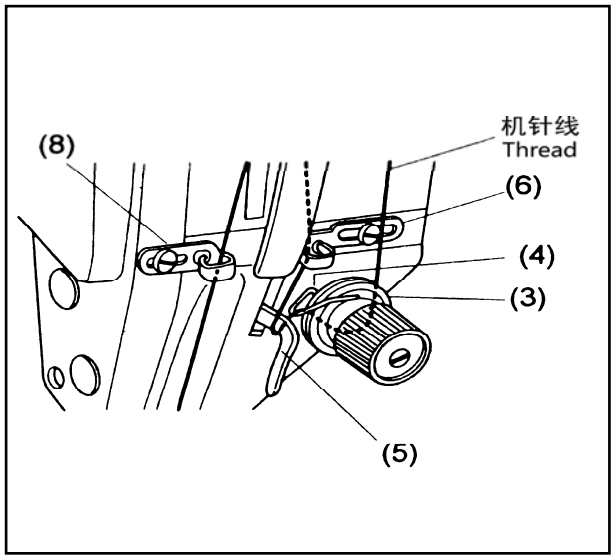

WWW.VISKASIUVIMUI.LT

7. 针距、倒顺送料 SET STITCH LENGTH AND REVERSE FEEDING

1) 针距的长短，可以用转动针距表盘 A 来调节。针距表盘 A 的平面 B 上的数字表示针距长短尺寸(单位为毫米)。
2) 倒向送料时，可以将倒缝操作杆 C，向下揿压，即能进行倒送。手放松后，倒缝操作杆 C 自动复位，恢复顺向送料。
3) 缝制中轻轻按下倒缝按钮的期间，进行倒缝，手放开按钮，恢复顺缝。推动照明按钮，可打开 LED 灯照明。

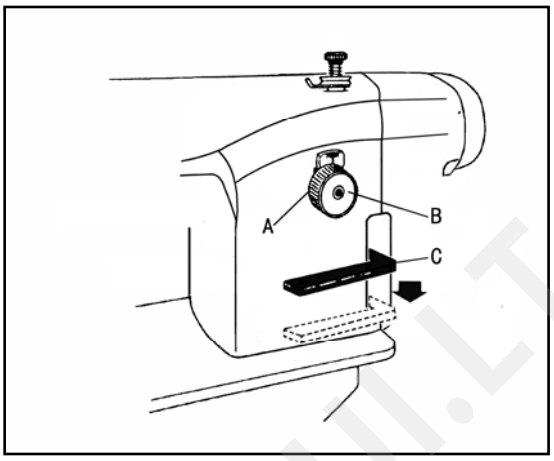

1) Stitch length can be set by turning Dial (A).The figures on Face (B) of dial show stitch length in mm.
2) Reverse feeding starts when Reverse Feed Lever (C) is depressed, and the machine will feed forward again if Reverse Feed lever (C) is released.
3) With the backstitch button pressed lightly during sewing, reverse sewing can be done. When the push-button is released, reverse sewing turns into forward sewing. Push the lighting button to turn on the LED light.

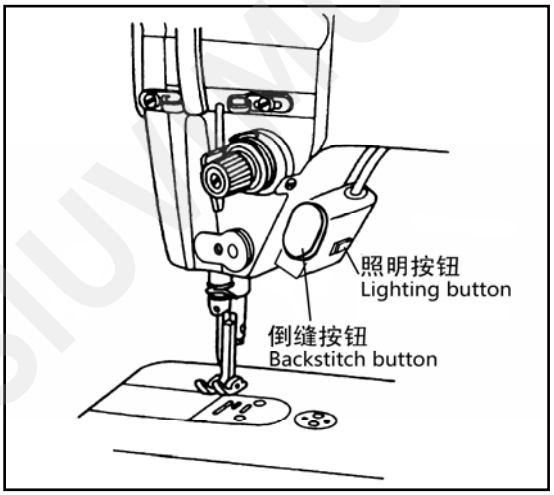

8. 压紧杆高度定位 POSITION PRESSER BAR

先旋松压紧杆的调压螺钉锁紧螺母 E，然后旋松调压螺钉 A，卸下面板 B 的橡皮塞，旋松螺钉 C，定出压紧杆的位置(压紧杆的正确定位：在压脚上升最高时，针板面与压脚底面距离为 6 毫米)，旋紧螺钉 C，塞上橡皮塞，再旋紧压紧杆螺钉 A，然后旋紧调压螺钉锁紧螺母 E，即成。

Loosen lock Nut (E) and Pressure Regulating Thumb Screw (A). Remove rubber plug from Face Plate (B). Loosen Screw (C) and adjust the position of Presser Bar (D) till the presser foot is 6 mm above the throat plate will the presser foot lifted to its highest. Tighten Screw (C) and put in the rubber plug. Tighten pressure Regulating Thumb Screw (A) and Lock Nut (E).

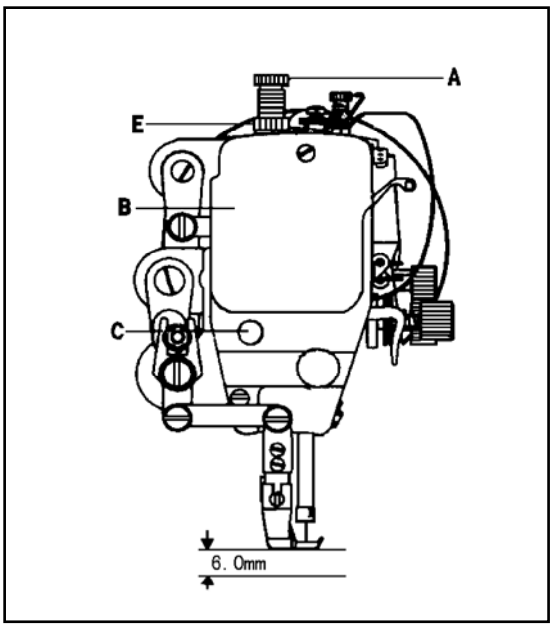

WWW.VISKASSIUVIMUI.LT

9. 压脚压力调节 ADJUST THE PRESSURE OF PRESSER FOOT

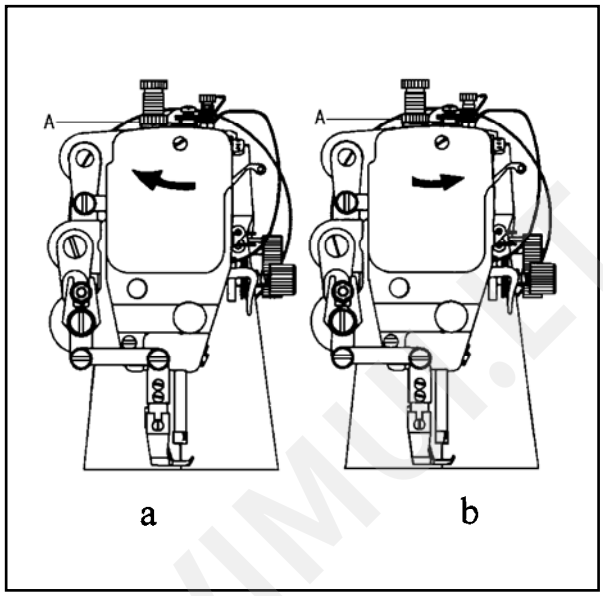

压脚的压力，要根据缝料的厚度加以调节。首先旋松调压螺钉锁紧螺母 A，缝纫厚料时，应加大压脚压力，这时将机头顶部的调压螺钉按图 a 所示箭头方向转动，反之，缝纫薄料时，可按图 b 所示的方向，转动调压螺钉，以减少压脚压力。最后旋紧调压螺钉锁紧螺母 A 即成。压脚的压力，应以能正常推送料为宜。

Pressure of presser foot is to be adjust in accordance with thickness of materials to be sewn.

First loosen Lock Nut (A). For heavy materials, turn the pressure regulating thumb screw (a) to increase the pressure, while for light materials, turn the pressure regulating thumb screw (b) to decrease the pressure. Then tighten Lock Nut (A). The pressure of presser foot is recommended to be less as long as normal feeding is ensured.

10. 挑线簧调节 ADJUST THREAD TAKE-UP SPRING

挑线簧摆动幅度为 8-10 毫米。缝纫薄的缝料(短针距)，则要减弱挑线簧的张力和放宽其摆动幅度，缝制特别厚的缝料则反之。

The rang of the thread take-up spring is 8 to 10mm.Sewing light material (small stitch), weakened the tension of the thread take-up spring and widened the range of the thread take-up spring. Sewing the heavy material, the adjustment is opposite.

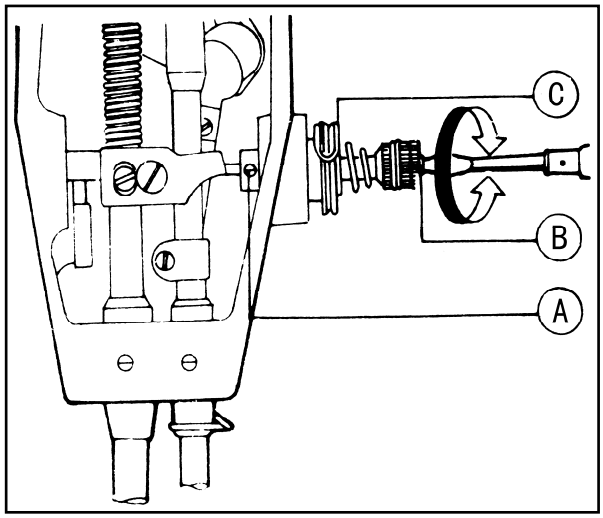

1) **挑线簧张力调节 Adjusting the thread take-up spring tension**

先旋松夹线调节座螺钉 A，夹线螺钉 B 就能转动，顺时针转动时，张力增加，反之则减少，调节好后，仍将夹线调节座螺钉 A 旋紧。

控制方法：松开夹线调节座螺钉 A，将夹线螺钉 B，逆时针转动，使挑线簧 C 的张力压缩到 0，再把夹线螺钉 B 顺时针转动，至挑线簧 C 触及夹线调节座上止动缺口，然后，夹线螺钉 B 再逆时针回转二分之一转动角度即可。最后旋紧夹线调节螺钉 A。

WWW.VISKASSIUVIMO.LT

Loosen Set Screw (A), turn Tension Stud (B) clockwise to increase the spring tension, or turn the stud counter-clockwise to decrease the spring tension. After the adjustment, be sure to tighten Set Screw (A).

To Attain this: First loosen Set Screw (A), turn Tension Stud (B) counter-clockwise to decrease the tension of Thread Take-up Spring (C) to zero, then turn Tension Stud (B) clockwise until Spring (C) comes to the notch of thread tension regulating bushing, and again turn Tension Stud (B) halfway back (counterclockwise) After the adjustment. Tighten Set Screw (A).

2）挑线簧摆动幅度的调节 Adjusting the thread take-up spring stroke

放松夹线调节座固定螺钉 B，转动夹线器 C，调节其摆动幅度，夹线器 C 顺时针转动，摆动幅度增大。反之则减少。通常，机器在出厂前，挑线簧均以调整妥善。只是在缝纫特殊的缝料或特殊的缝线时，才需要重新进行调整。

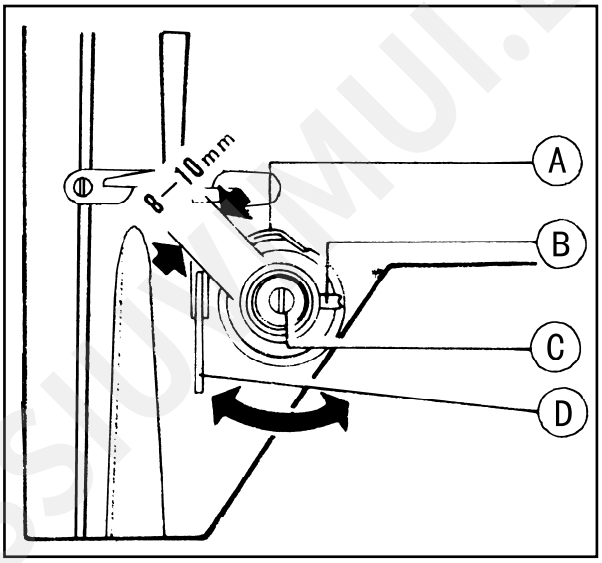

Loosen Set Screw (B), turn Stud (C) clockwise to increase the stroke or turn Stud (C) counter-clockwise to decrease the stroke. After the adjustment, tighten Set Screw (B). Before leaving the factory, the thread take-up spring has properly been adjusted. Readjustment is needed only in the case of special material or special thread.

11. 底面线张力调节 ADJUST THREAD GUIDE AND THREAD TENSION

1） 过线勾位置调整 Adjusting of the thread guide

	左侧 **Left**	中间 **Middle**	右侧 **Right**
过线勾位置 **Thread guide position**			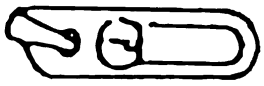
缝料 **Materials**	厚料 **Heavy**	中厚料 **Medium**	薄料 **Light**

过线勾的位置，根据上表，参照缝料的缝制条件进行相应调节。

Refer to the table above, and adjust according to the stitching conditions, the material and thread.

WWW.VISKASHOUMUI.T

2） 缝线张力 Adjusting of thread tension

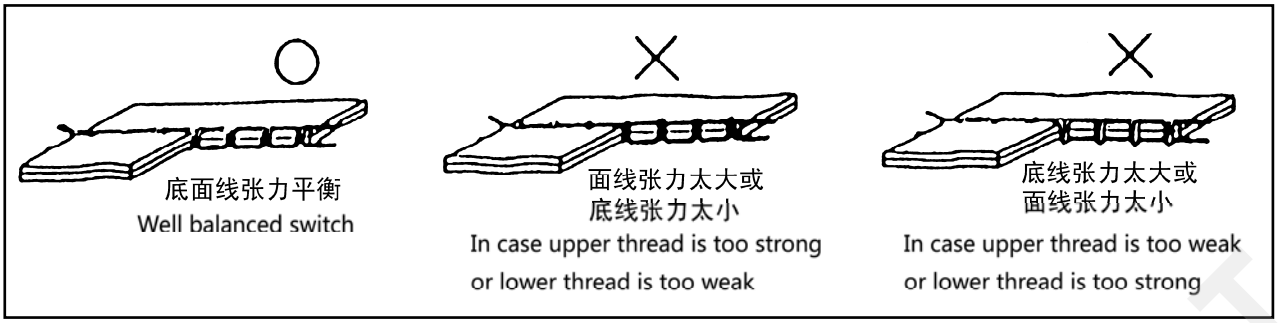

3） 面线张力调节 Adjusting of upper thread tension

(1) 按图示旋转夹线螺母调节面线张力。

(2) 应根据底线张力调节面线张力。

(3) 通常，机器在出厂前，挑线簧调整妥善。在缝纫特殊的缝料或特殊的缝线时，需要进行调整。

(1) Upper thread tension can be adjusted by thread tension nut.

(2) Upper thread is to be adjusted according to the lower thread tension.

(3) For special fabric sewing with special thread, the desired tension can be obtained by adjusting the strength and operating range of thread take-up spring.

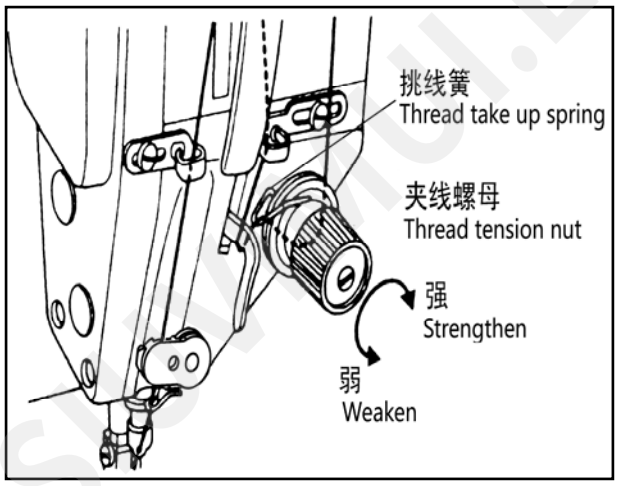

4）底线张力调整 Adjusting of lower thread tension

(1) 用小号螺钉起子旋转梭心套上的梭皮螺钉（A）加大或减少底线压力。

Lower thread tension can be adjusted by screw (A).

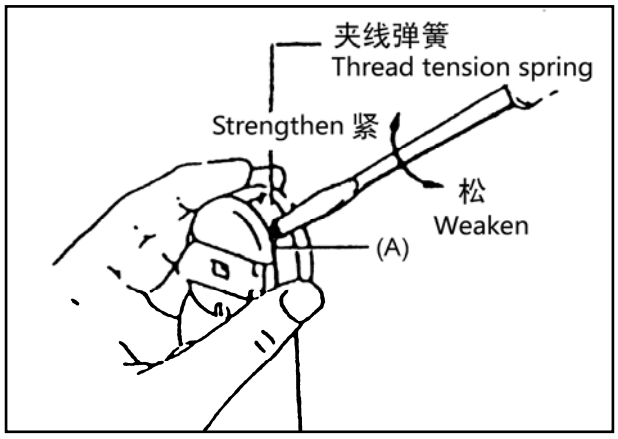

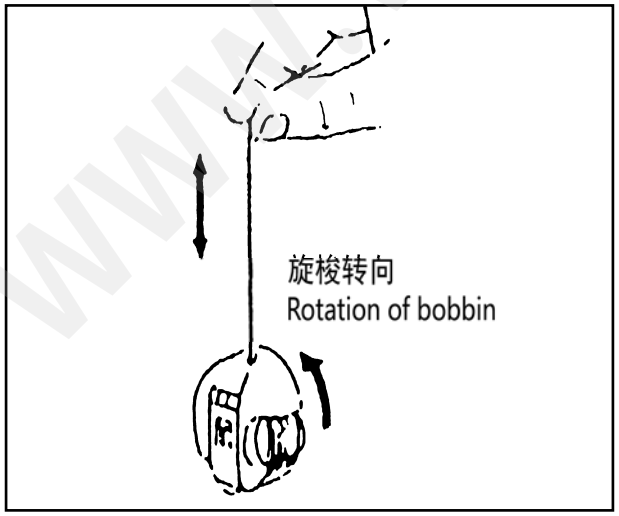

(2) 一般来说，梭心装入梭心套后，拉出缝线穿过梭心套线孔，捏住线头吊起梭套，梭心套则能缓缓下落，就可以使用。

The thread tension can be checked as the following. Hold the end of pulled out thread and if the bobbin case fall slowly, the tension is proper.

WWW.VISKASSHOP.LT

5） 剪线后存留机针线长度的调整 Adjustment of remaining needle thread length after thread trimming

(1) 拧转夹线螺钉 ① 进行调节。

(2) 顺时针旋转，留在机针上的线变短。
逆时针旋转，留在机针上的线变长。

(1) Turn the pretension nut ① and adjust.

(2) When turned clockwise, the length of thread left in the needle will be short. When turned counterclockwise, the length of the thread left in the needle will be long.

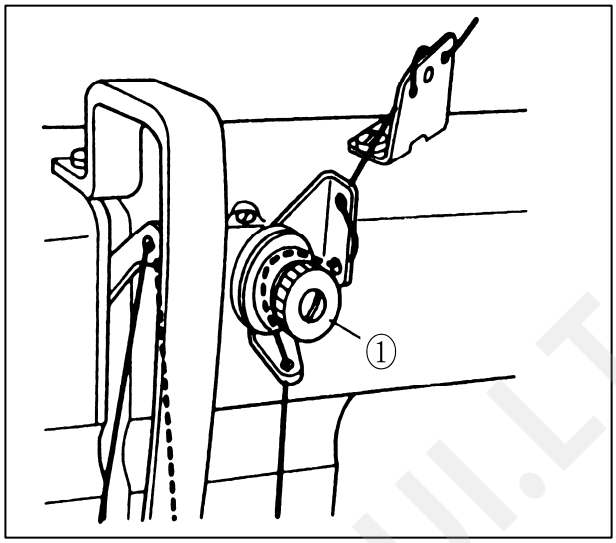

12. 机针与旋梭同步调节 TIME NEEDLE TO ROTAING HOOK

1）机针位置的调节： Adjusting the needle position

用手转动主动轮，使针杆 C 下降至最低位置，卸下面板 A 上的橡皮塞，旋松针杆 C 上的针杆接头螺钉 B，上下移动针杆 C，定出同步位置(针杆的同步位置：针杆下降至最低位置时，针杆上的同步标记 E 与套筒 D 下端面成一致的位置，这时机针线孔的中心 F 与旋梭内面 G 也成一致位置)。 旋紧针杆接头螺钉 B，塞上橡皮塞即成。

Turn balance wheel by hand to bring Needle Bar (C) to the lowest position of its stroke. Remove rubber plug from Face Plate (A).Loosen Set Screw (B) of needle bar adaptor. Move Needle Bar (C) vertically to adjust needle timing. After the adjustment, tighten Set Screw (B) and put in the rubber plug. The standard needle timing is to align Timing Mark (E) on the needle bar and the bottom of Needle Bar Bushing (D) and meanwhile align the Inner Surface (G) of the hook and the center of Needle Eye (F) when the needle bar gets down to its lowest position.

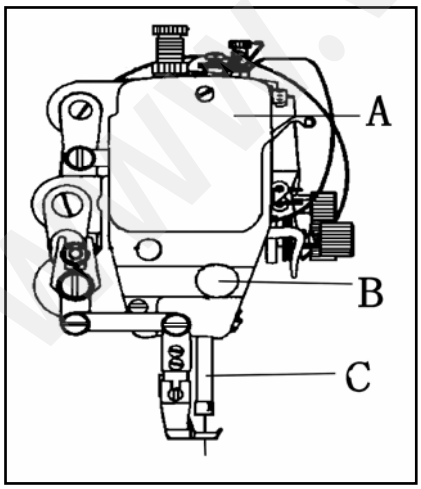

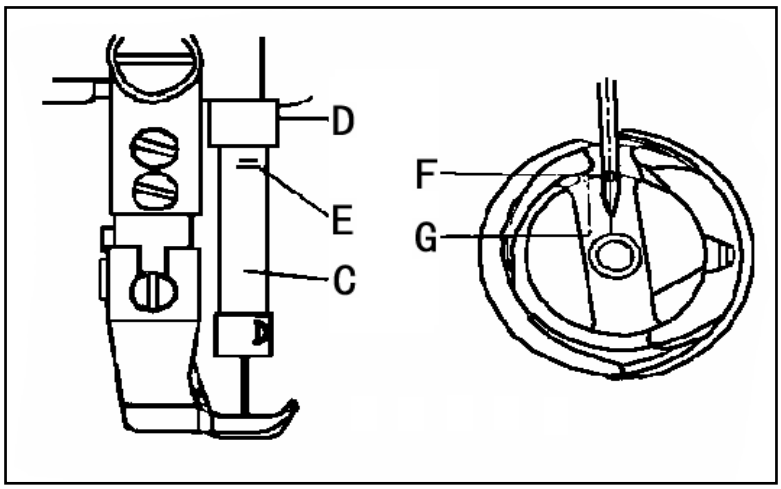

WWW.VISKASSIUVIMUI.LT

2）旋梭同步的调节：Adjusting the hook point timing

旋梭和机针之间的相互运动关系，对缝纫性能的影响很大。标准的同步关系是：当机针向下运动到最低位置后，目测针杆的同步标记 A 的间距为 2.2 毫米，把针杆 B 从最低位置上升 2.2 毫米，这时旋梭的钩线尖 D，应与机针的中心线 C 一致，在此位置时，钩线尖 D 应高于机针线孔 E 上边 1.0-1.5 毫米。

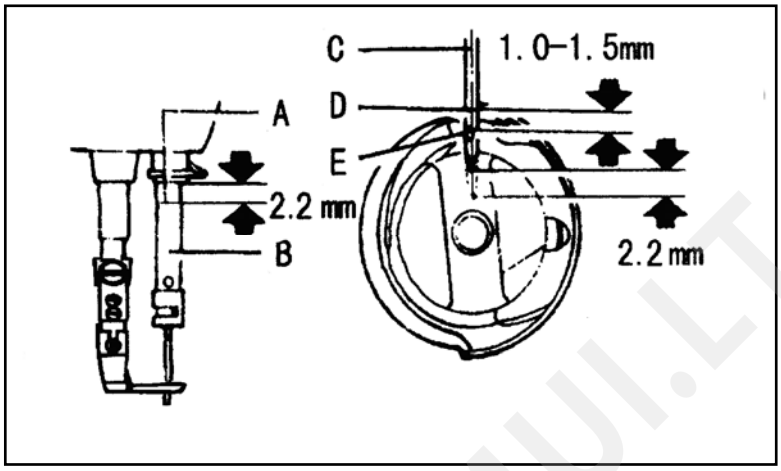

Timing of needle motion to rotating hook motion has a great effect on sewing performance. The standard hook point timing is to align Hook Point (D) and Needle Centerline (C) when Needle Bar (B) is lifted by 2.2mm from the lower end of its stroke. Besides, Hook Point (D) should be 1.0-1.5mm above the upper end of needle eye (E).

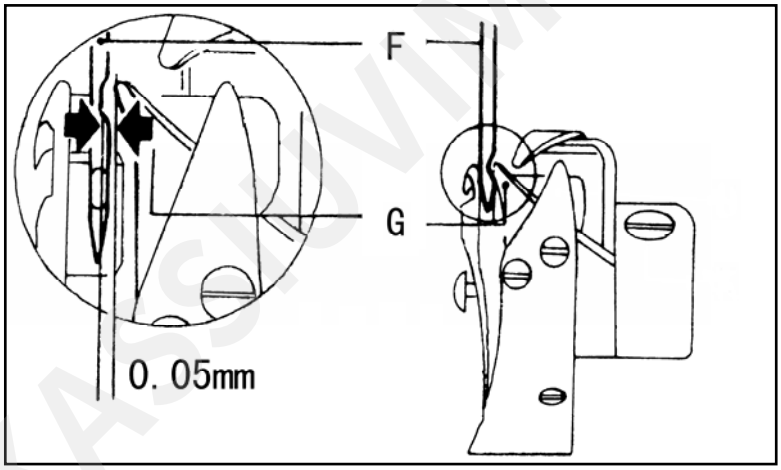

在调节旋梭的同步关系时，还要注意到旋梭尖与机针的侧面间隙。机针 F 缺口的底部与旋梭钩线尖 G 的间隙为 0.05 毫米。

When adjusting the hook point timing, also notice that the clearance between the bottom of needle notch (F) and Hook Point (G) should be approx. 0.05mm.

13. 旋梭装卸 REPLACE ROTATING HOOK

先将针杆上升到最高位置，拆下针板，取下机针和梭心套。旋开旋梭定位勾螺钉 C，把旋梭定位勾 A 取下。再旋松旋梭螺钉 D。在此位置如果取出旋梭，旋梭将会与牙架相碰，此时可以转动主动轮使牙架上升到最高位置。然后扭转旋梭让过牙架位置，即能将旋梭很容易地取下。安装旋梭时，可以重复上述过程。注意：旋梭定位勾的安装位置应是旋梭定位勾 A 的勾尖侧面与机针 B 的侧面应成一致。其另外两侧面之间间隙为 0.5-0.7 毫米。

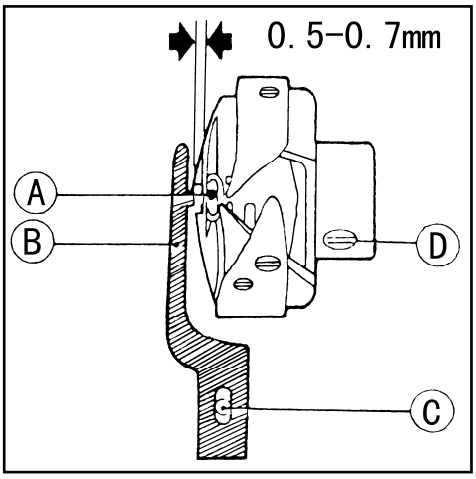

WWW.VISKASIUVIMUI.LT

Lift needle bar to the highest position of its stroke. Remove throat plate, take down needle and bobbin case. Loosen Screw (C) of hook position and take down Hook Position (A). Loosen two Screws (D) of rotating hook. Turn balance wheel to raise feed bar to its highest position, then take down the rotating hook by turning it away from feed bar. Installing the hook can be done in reverse sequence. Note that Needle (B) and the convex surface of Hook Position (A) should align with a clearance of 0.5-0.7mm between them.

14. 梭心线的绕法 HOW TO WIND THE LOWER THREAD ON THE BOBBIN

1) 将梭心安装在梭心轴上。
2) 按图示穿线，照顺时针方向在梭心上绕几圈。
3) 按图示箭头方向按扳手①，然后启动机器。
4) 线绕满后，扳手①被弹开，绕线自动停止。
5) 调节夹线螺母②来调整梭心线的紧密度。
6) 梭心线的线量调节：
拧松螺钉③移动调节板④。
a. 将调节板④方向 a 方向移动，线量减少。
b. 将调节板④方向 b 方向移动，线量增加。

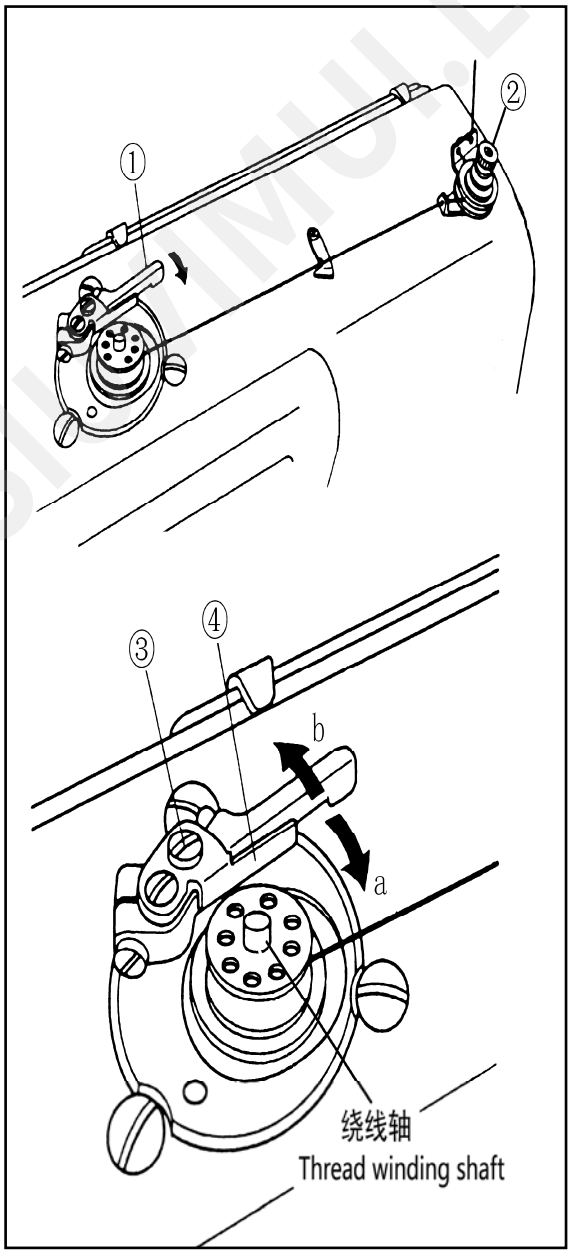

1) Press the bobbin onto the thread winding shaft.
2) Pass the thread for winding thread as shown in the figure, and wind the end of the thread clockwise around the bobbin several times, then wind the thread on the thread adjuster side counter-clock wise several times.
3) Press lever ① in the direction of the arrow, and start the sewing machine.
4) The operation will automatically stop when winding is completed.
5) Adjustment of thread winding strength Adjust with the thread adjuster nut ②.
6) Adjustment of thread winding amount Adjust by loosening screw ③ and moving the adjustment plate ④
a. The thread winding amount will decrease when moved in the direction of a.
b. The thread winding amount will increase when moved in the direction of b.

WWW.VISKASSIMULT

15. 松线器挺线调节 ADJUST OPENING TIME OF THE TENSION DISCS

压脚在提升范围(2-7 毫米)，夹线器上的夹线板有一个张开期，挺线的时间可以进行调节。调节时，先卸下机头背面的橡皮塞，旋松膝控提升杠杆(左)螺钉 A，这时松线凸轮 D 可以左右移动，往右移挺线慢，往左移挺线快。调节时，如有条件的话，在压脚 C 下垫上一块与压脚提升高度尺寸相等的垫块，则调节时方便。调节好，拧紧螺钉 A。

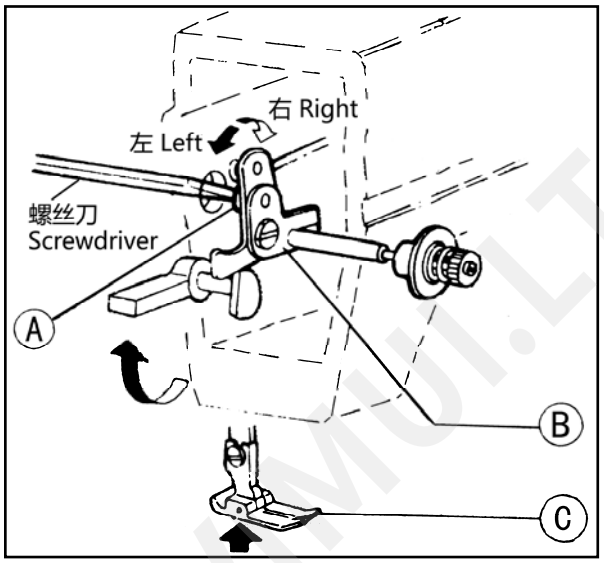

Within the presser foot lift range of 2-7mm opening time of the tension discs can be adjusted as follows. Remove the rubber plug from the back of arm and loosen Screw (A) of knee lifter lever (left).Move the tension releasing cam (B) leftward for earlier opening or rightward for later opening. It will facilitate the adjustment to put under the presser foot (C) a block as thick as the presser foot lift. After the adjustment, fully tighten Screw (A).

16. 送布牙的调整 ADJUST THE HEIGHT OF FEED DOG

1) 转动主动轮，直至送布牙从针板面突出的最高位置为止。
2) 旋松抬牙轴曲柄(右)螺钉 A。
3) 把牙架 B 按所示的箭头方向移动，定出送布牙高度。
（送布牙高度：送布牙尖端至针板面 B 的间距为 1mm）
4) 调节好后把螺钉 A 旋紧。

1) Turn balance wheel until feed dog is lifted to its highest position from throat plate surface.
2) Loosen Screw (A) of feed lifting rock shaft crank right
3) Move Feed Bar (B) in the direction shown by the arrow to adjust the height of the feed dog. The standard height of feed dog is that the top of feed dog is 1mm above Throat Plate Surface (B).
4) After the adjustment, be sure to tighten Screw (A).

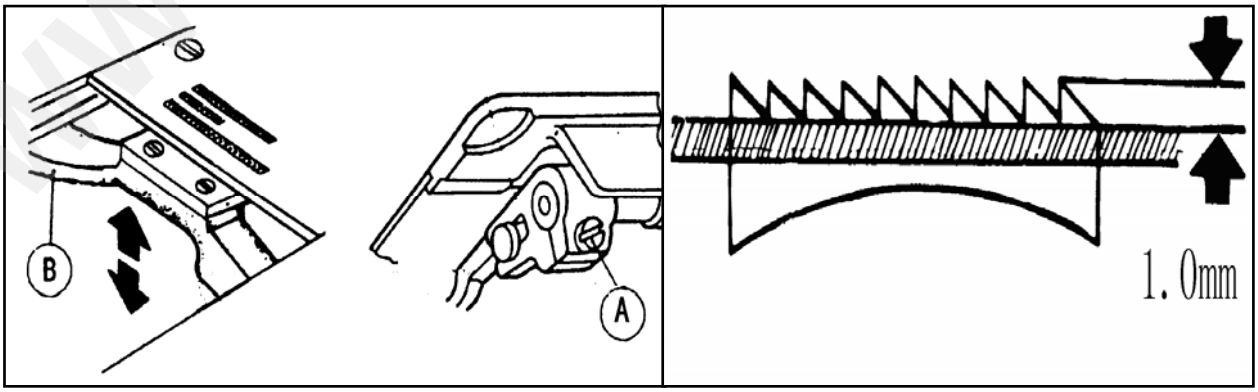

WWW.VISKASSIUVIMOI.LT

17. 调整送布牙倾角 ADJUSTMENT OF FEED DOG INCLINATION

送布牙的标准位置应为水平。如果需要，可以根据缝料按照以下方法调整送布牙倾角

1）旋松螺钉 A。

2）用螺钉起子左右旋转牙架曲柄偏心轴。

3）调整结束，旋紧螺钉。

If necessary, adjust the inclination according to the material to be sewn as follows:

1) Loosen the screw “A”.

2) Rotate the eccentric shaft clockwise or counterclockwise with screw driver.

3) Tighten the screw “A”.

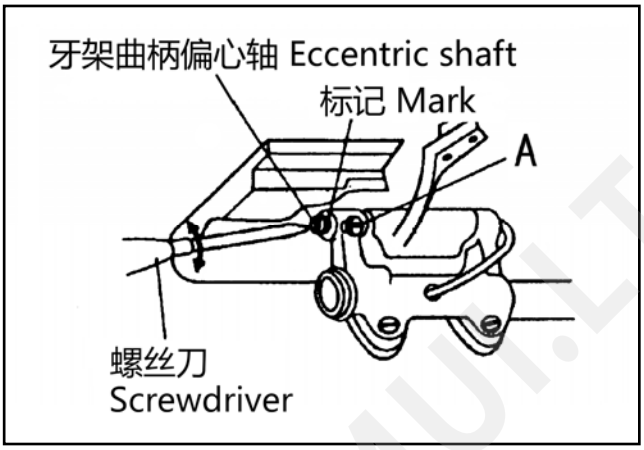

牙架曲柄偏心轴上的标记位置 Position of mark on the eccentric shaft	送布牙 Feed dog
水平 Horizontal	标准 Standard
上 Up	前端上升 Front up (MAX)
下 Down	前端下降 Front down (MAX)

18. 送布牙与机针同步调节 TIME FEED MOTION TO NEEDLE MOTION

机针 A 尖端到达针板面 B 时，送布牙 C 尖端与针板面 B 高低一致，此为标准同步关系。

The standard timing of feed motion to needle motion is that the top of feed Dog (C) is flush with Throat Plate Surface (B) when the point of Needle (A) reaches Throat Plate Surface (B).

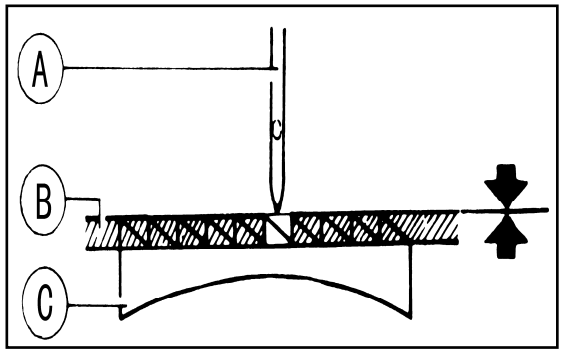

不同步时的调节方法：先打开机壳后盖板、侧板，旋松送布凸轮螺钉 A、D，按住送布凸轮 B，再缓缓转动主动轮，当上轴油孔 C 的上端与送布凸轮的基准孔 G 的下端一致时，即达到同步关系。调节时，送布凸轮 B 与牙叉滑块 H 的间隙应为 0.3-0.5mm。最后，旋紧螺钉 A、D 即可。

If feed motion is not timed to needle motion, adjust as follows:

Remove Arm back cover and side cover. Loosen Set Screws (A) and (D) of feed and feed lifting eccentric. Hold Feed and Feed Lifting Eccentric (B) and turn Balance Wheel slowly until the upper edge of Arm Shaft Oil Hole

WWW.VISKASSIUVIMUI.LT

(C) aligns with the lower edge of Reference Hole (G) of feed and feed lifting eccentric. Leave a clearance of 0.3-0.5mm between Feed and Feed Lifting Eccentric (B) and Eccentric Sleeve (H), then tighten Set Screws (A) and (D).

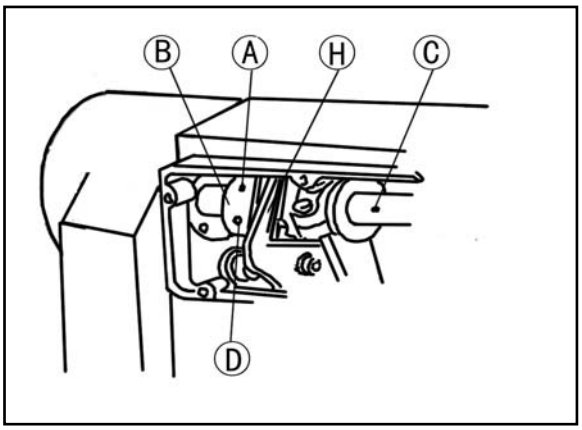

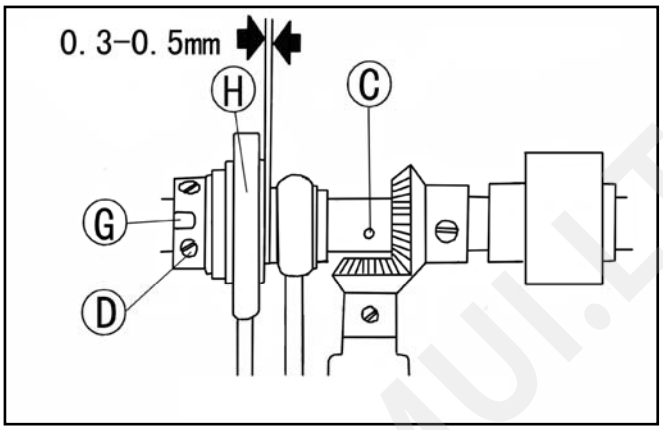

19. 剪线装置的调整 ADJUSTMENT OF THREAD TRIMMER MECHANISM

1）剪线装置如图所示 The thread trimmer mechanism illustrated

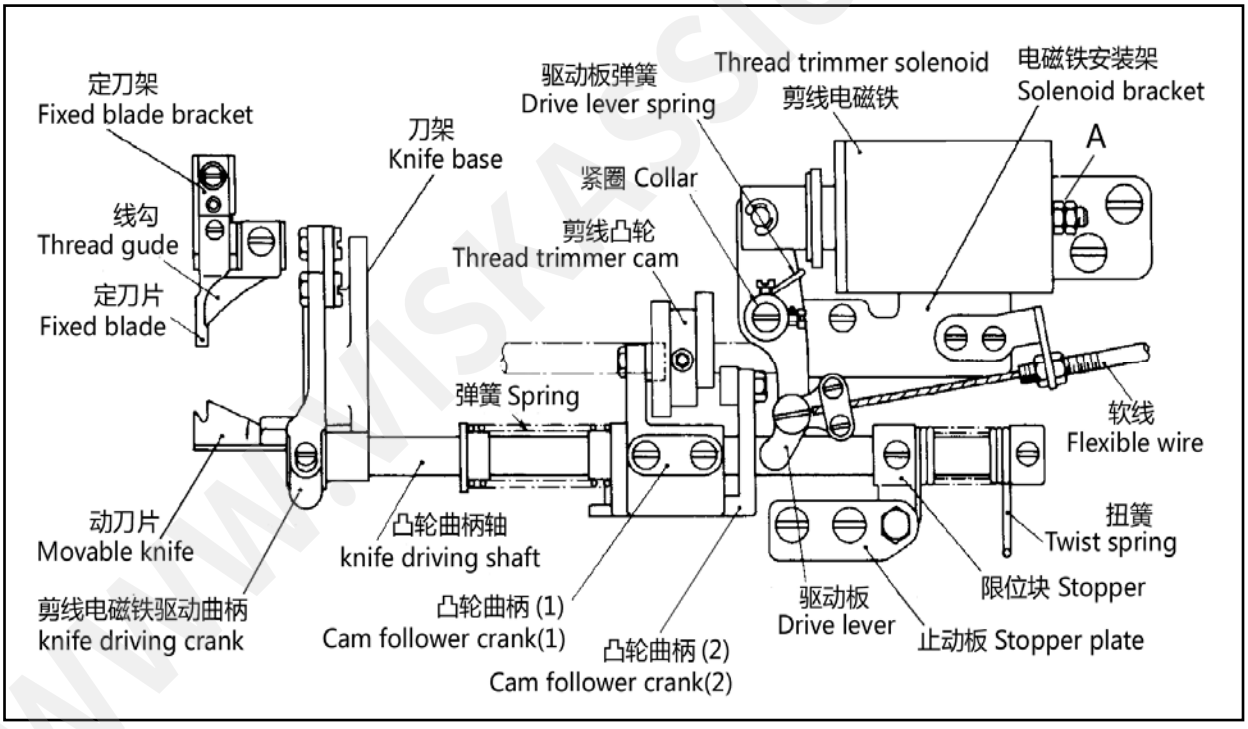

2) 剪线电磁铁的行程：Operation stroke of the thread trimmer solenoid：

(1) 标准的行程为 6.0m。

(2) 通过调节螺母 A 来调整行程。

(1) Standard operation stroke is 6.0mm.

(2) This stroke can be adjusted by using nut “A”.

WWW.VISKASSEWINGUI.LT

3）刀片的调整：Adjustment of knife engagement

（1）动刀片与定刀片的关系：

如图所示，动刀片与机针中心的距离为 7.5mm，定刀片与机针中心的距离为 5mm。

（2）刀片的调整：

启动机器，电磁铁工作，剪线凸轮会使动刀转动。当动刀转到极限位置时，其与定刀片的距离为 1.5—2mm。

（3）剪线电磁铁的调整：

a. 如果剪线情况不良，尤其当线比较粗时，只需增加剪线压力即可。

b. 剪线压力可如下所述进行调整：松开螺母 B，通过调节螺钉 A 来调整剪线力量。

（1）Position of movable knife (left) and fixed blade:

The standard distances from the needle center are 7.5mm and 5mm from the movable knifeand fixed blade respectively.

（2）Adjustment of knife engagement:

With the solenoid activated, turn on the machine. This rotates the thread trimming cam which rotates the movable knife. When the movable knife has moved to its farthest distance, the standard engagement of the blade is 1.5mm-2.0mm. The engagement can be adjusted properly mounting the drive arm.

（3）Adjustment of knife engagement pressure:

a. If a thread is poorly cut, particularly when it is thick, slightly increase the engaging pressure. This should solve the problem.

b. The engaging pressure can be adjusted in this way: Loosen lock nut “B” and adjust it by using adjusting screw “A”

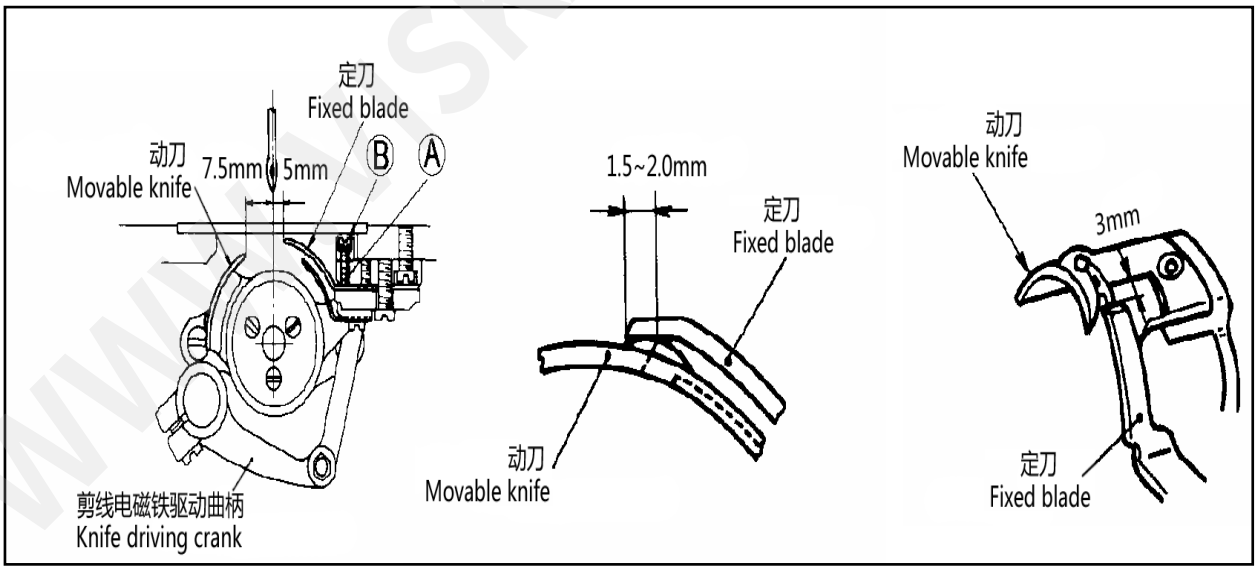

WWW.SKASSIUVIMUI.LT

20. 定期清扫 PERIODICAL CLEANING

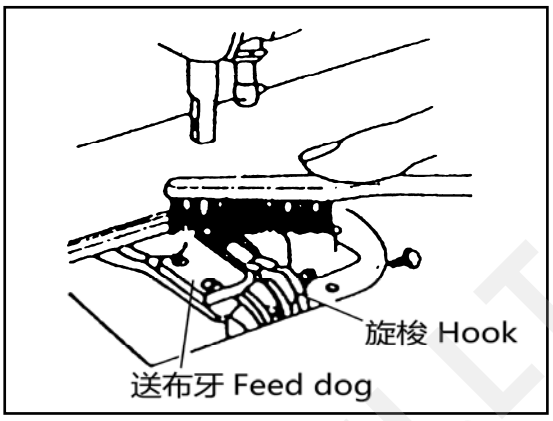

1）送布牙、旋梭 Machine

（1）卸下针板，清扫送布牙。

（2）装针板时，应用手将螺钉拧 2-3 圈，然后旋紧针板螺钉，要上均匀。

（3）将机头放平，仔细清扫旋梭，同时用软布拭擦梭芯套。

(1) Remove the throat plate and clean the feed dog.

(2) Assembling is to be made by screwing in the screw by 2 to 3rotations by hand at first, then tightening them evenly by use of a long size screw driver.

(3) Lay down the machine head and clean the hook and inner bobbin case.

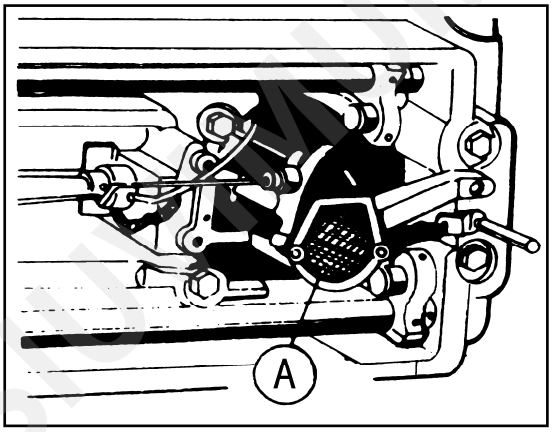

2）油泵滤网的清扫 Cleaning oil pump, screen

如图所示，清除滤网 A 上的尘屑。

Swing out the machine head and clear off the dust and dirt on oil pump screen A.

WWW.VISKASSIUVIMAI.LT

A.机壳部件 ARM BED AND IT'S ACCESSORIES

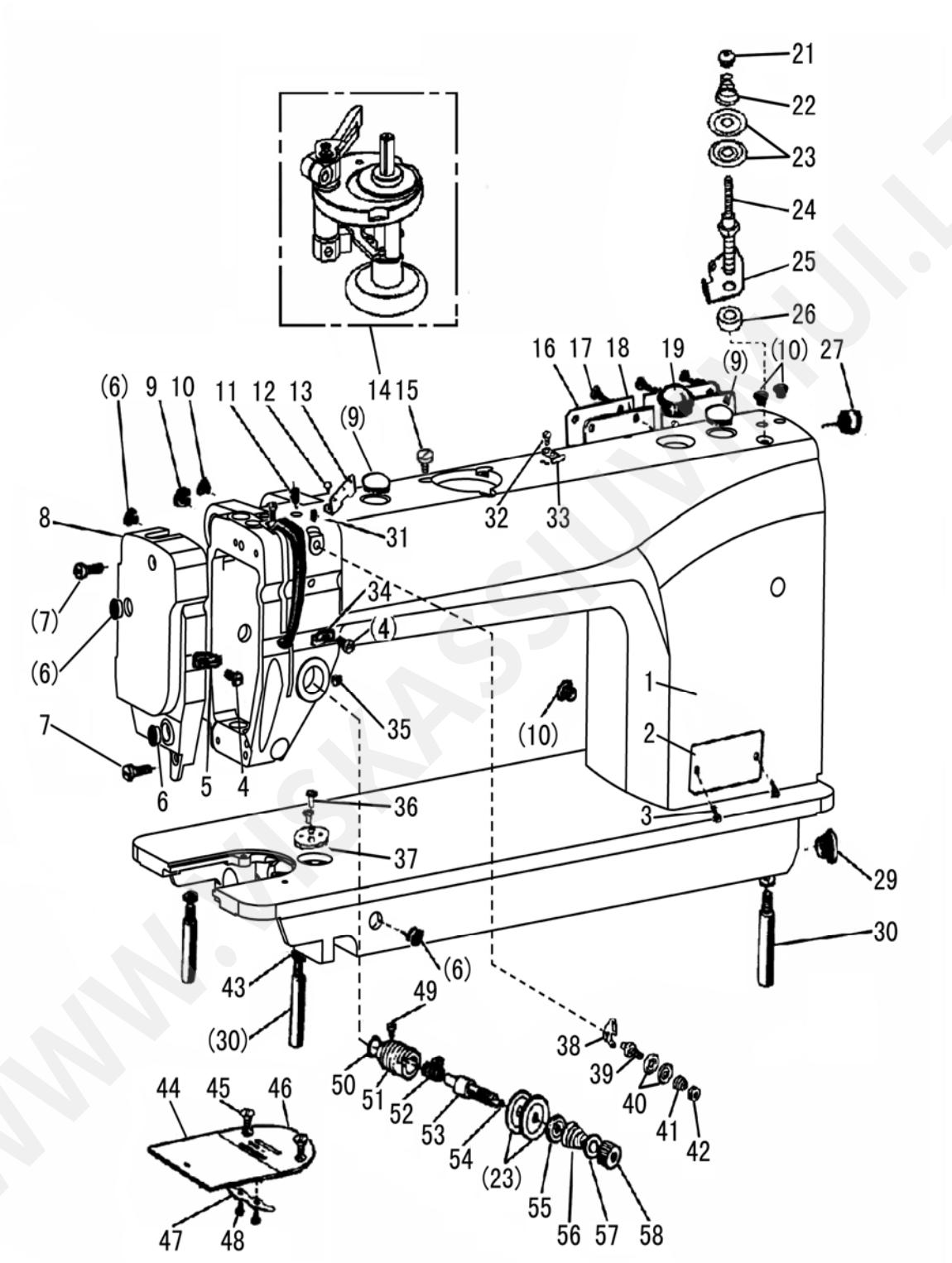

WWW.VISKASSIUVINUI.LT

A.机壳部件 ARM BED AND IT'S ACCESSORIES

序号 Fig.No.	样本编号 Part No.	名　　称	Description	DY-850	DY-851	备　注 Remarks
A01	HFB9057101	机壳组件	Arm	1	1	
A02	HFB9108001	型号牌	Trade mark plate	1		
A02	HFB9188001	型号牌	Trade mark plate		1	
A03	H924025050	铭牌铆钉	Rivet	2	2	Φ2.5×5
A04	HA106B0676	线勾螺钉	Thread guide screw	2	2	SM9/64″×40
A05	HA607B0671	面板线勾	Thread guide on face plate	1	1	
A06	HA307B0674	橡皮塞(Φ11.8)	Rubber plug (Φ11.8)	4	4	
A07	HA700B2030	面板螺钉	Face plate screw	2	2	SM11/64″×40
A08	HFB9128001	面板	Face plate	1	1	
A09	HA307B0673	回油观察孔橡皮塞(Φ19)	Rubber plug (Φ19)	3	3	
A10	HA300B2090	橡皮塞(Φ8.8)	Rubber plug (Φ8.8)	4	4	
A11	HA300B2110	橡皮塞(Φ5.7)	Rubber plug (Φ5.7)	1	1	
A12	HA700B2060	线勾螺钉	Set screw	1	1	
A13	HA700B2050	三孔线勾	Three-hple thread guide	1	1	
A14	HY91B37101	绕线器组件	Bobbin winder assy	1	1	
A15	H2400I2080	绕线器安装螺钉	Set screw	3	3	
A16	H6028B8001	侧盖	Arm side cover	1	1	
A17	HA300B2170	侧盖螺钉组件	Screw group	4	4	
A18	H6029B8001	侧盖垫片	Gasket for arm side cover	1	1	
A19	H1210B0671	油窗	Check window	1	1	
A21	HA710B0671	夹线螺母	Nut	1	1	
A22	H6739B8001	夹线弹簧	Thread tension spring	1	1	
A23	HA310B0705	夹线板	Thread tension disc	4	4	
A24	H6735B8001	夹线螺钉	Thread tension stud	1	1	SM15/64″×28
A25	H6736B8001	夹线过线板	Thread guide	1	1	
A26	H6737B8001	垫圈	Spacer	1	1	
A27	H6030B8001	橡皮塞(Φ22)	Rubber plug (Φ22)	1	1	
A29	HA300B2100	橡皮塞(Φ27)	Rubber plug (Φ27)	1	1	
A30	HA100B2220	底板撑杆	Leg	3	3	
A31	HA100B2110	三眼线勾螺钉	Set screw	1	1	SM11/64″×40
A32	H6762B8001	剪线板螺钉	Screw	2	2	
A33	H6756B8001	剪线板	Thread cutter	1	1	
A34	HA600B2050	线勾	Thread guide at arm center	1	1	
A35	HA300B2080	夹线调节座固定螺钉	Set screw	1	1	SM15/64″×28
A36	HA300B2130	夹边座螺钉	Screw	2	2	SM11/64″×40
A37	HA300B2140	夹边座	Plate for guide	1	1	
A38	HA710B0674	小夹线过线板	Pre-tension thread guide	1	1	
A39	HA710B0673	小夹线螺钉	Screw type tension stud	1	1	SM11/64″×40
A40	HA112B0693	小夹线板	Disc for pre-tension	2	2	
A41	HA710B0672	小夹线弹簧	Spring for pre-tension	1	1	
A42	HA710B0671	小夹线螺母	Nut	1	1	
A43	H005008060	弹簧垫圈	Spring washer	2	2	

WWW.VISKASIUVIMUI.LT

A.机壳部件 ARM BED AND IT'S ACCESSORIES

序号 Fig.No.	样本编号 Part No.	名　　称	Description	DY-850	DY-851	备　注 Remarks
A44	H6812B8001	推板	Slide plate	1	1	
A45	HA300B2190	针板螺钉	Needle plate screw	2	2	SM11/64″×40
A46	H1100B2060	针板	Needle plate	1	1	
A47	HA324B0711	推板簧	Slide plate spring	1	1	
A48	HA124B0713	推板簧螺钉	Screw	2	2	
A49	HA115B0708	夹线调节座螺钉	Screw	1	1	
A50	HA115B7011	0型圈	O-ring	1	1	
A51	HA310B0703	夹线调节座	Thread tension regulating bushing	1	1	
A52	HA806B0671	挑线簧	Thread take-up spring	1	1	
A53	HA806B0673	夹线螺钉	Screw type tension stud	1	1	
A54	HA115B0709	松线钉	Thread tension releasing pin	1	1	
A55	HA310B0702	松线板	Thread tension releasing disc	1	1	
A56	H2206B0671	夹线弹簧	Thread tension spring	1	1	
A57	HA115B7010	夹线螺母止动板	Stop disc	1	1	
A58	HA310B0701	夹线螺母小组件	Oil thumb nut	1	1	

WWW.VISKASSIUVIMUI.LT

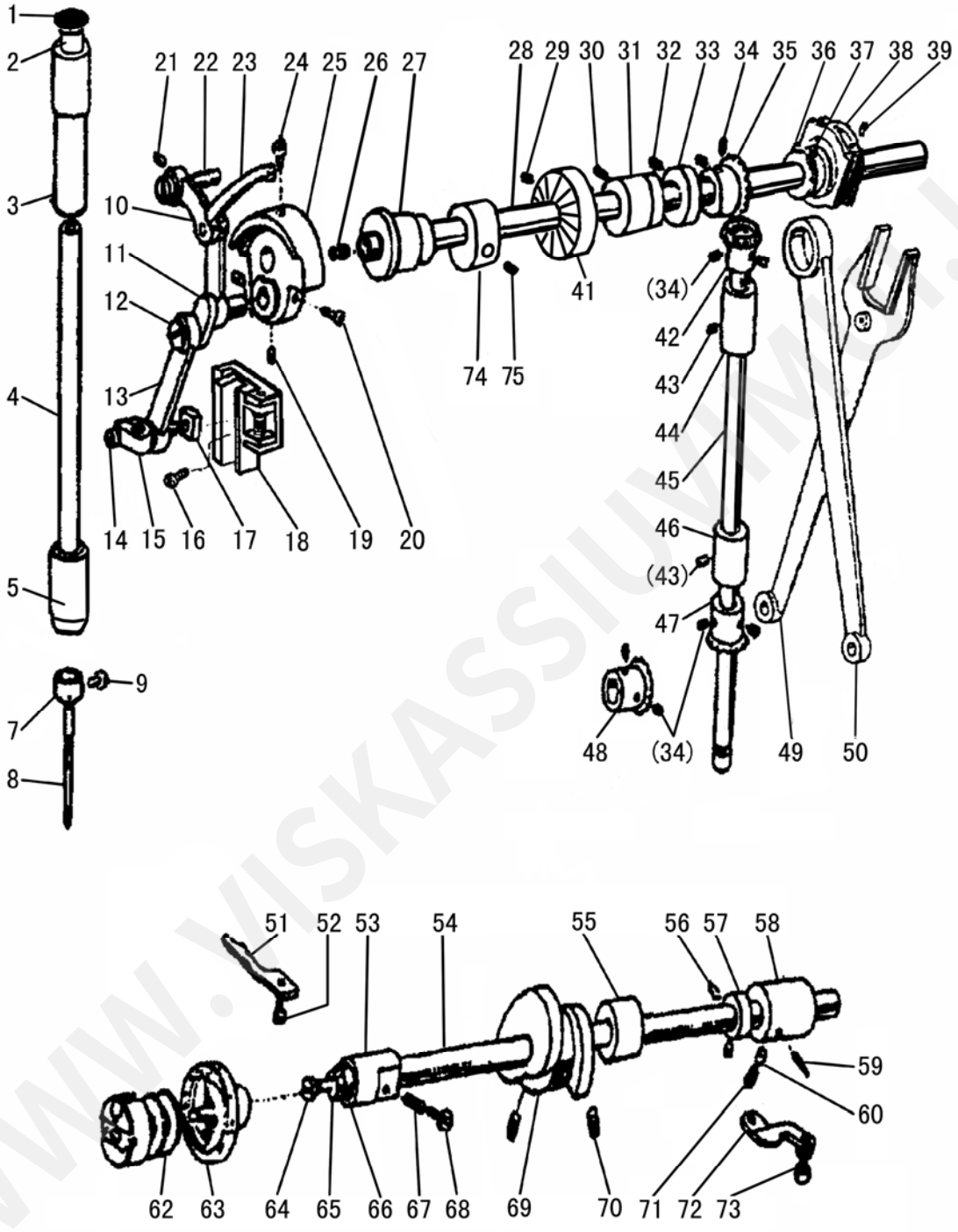

WWW.VISKASSIUVIMAS.LT

B.针杆、上轴部件 NEEDLE BAR & ARM SHAFT MECHANISM

序号 Fig.No.	样本编号 Part No.	名　　称	Description	DY-850	DY-851	备　注 Remarks
B01	HA300C2050	针杆轴套(上)橡皮塞	Rubber plug	1	1	
B02	HA100C2100	针杆轴套(上)毡塞	Felt plug	1	1	
B03	HA100C2080	针杆轴套(上)	Needle bar bushing (upper)	1	1	
B04	HN608C8001	针杆	Needle bar	1	1	
B05	HN606C8001	针杆轴套(下)	Needle bar bushing (lower)	1	1	
B07	HA500C2030	针杆过线环	Thread guide for needle bar	1	1	
B08		机针	Needle	1	1	DP×17 #18-#22
B09	HA100C2170	夹针螺钉	Needle clamp screw	1	1	SM1/8″×44
B10	H11112C104	挑线连杆	Thread take-up lever link	1	1	
B11	H6008C8001	挑线曲柄	Thread take-up crank	1	1	
B12	H2004H0067	挑线曲柄螺钉(左旋)	Set screw (left-handed)	1	1	SM9/64″×40
B13	H6616C8001	针杆连杆	Needlc bar link	1	1	
B14	HA106B0676	针杆接头螺钉	Screw	1	1	SM9/64″×40
B15	HA104C0658	针杆接头	Needle bar adaptor	1	1	
B16	HA100C2190	滑块导轨螺钉	Set screw	2	2	SM11/64″×40
B17	HFC9048001	针杆接头滑块	Slide block	1	1	
B18	HA704G0065	针杆接头滑块导轨组件	Guide for slide block	1	1	
B19	HA307C0662	挑线曲柄定位螺钉	Set screw	2	2	SM1/4″×40
B20	HA100C2060	针杆曲柄螺钉	Set screw	1	1	SM9/32″×28
B21	HA100C2020	挑线连杆铰链轴螺钉	Set screw	1	1	SM15/64″×28
B22	HA104C0653	挑线连杆铰链轴	Hinge pin	1	1	
B23	H2004H0681	挑线杆	Therad take-up lever	1	1	
B24	HA100C2070	针杆曲柄定位螺钉	Set screw	1	1	SM9/32″×28
B25	HA307C0661	针杆曲柄	Needle bar crank	1	1	
B26	HA104D0652	上轴橡皮塞	Rubber plug (Φ7.4×10)	1	1	Φ7.4×10
B27	HA100D2030	上轴轴套(左)	Arm shaft bushing(left)	1	1	
B28	HFD9058001	上轴	Arm shaft	1	1	
B29	H3416D0692	紧定螺钉	Set screw	2	2	SM15/64″×28
B30	HA100C2020	上轴轴套(中)螺钉	Set screw	1	1	SM15/64″×28
B31	HA100D2040	上轴轴套(中)	Arln shaft bushing(middle)	1	1	
B32	HA105D0662	上轴紧圈螺钉	Set screw	2	2	SM1/4″×40
B33	HA108G0661	上轴紧圈	Collar for	1	1	
B34	HA108C0663	伞齿轮螺钉	Set screw	8	8	M1/4″×40
B35	HA113D2112	上轴伞齿轮	Bevel gear for arm shaft	1	1	
B36	HA112D3012	抬牙连杆挡圈	Retaining ring	1	1	
B37	HFD9078001	送布凸轮	Feed and feed lifting eccentric	1		
B37	H38111D104	送布凸轮	Feed and feed lifting eccentric		1	
B38	HFD9088001	牙叉滑块	Slider	1		
B38	H38111D204	牙叉滑块	Slider		1	
B39	HA3411D308	送布凸轮螺钉	Set screw	2	2	
B41	HY91B28001	绕线器驱动轮	Bobbin winder driving wheel	1	1	
B42	HA113D2122	竖轴伞齿轮(上)	Bevel gear (upper)	1	1	

WWW.SKASSIUVIMUH.T

B.针杆、上轴部件 NEEDLE BAR & ARM SHAFT MECHANISM

序号 Fig.No.	样本编号 Part No.	名　　称	Description	DY-850	DY-851	备　注 Remarks
B43	HA100C2020	竖轴轴套螺钉	Set screw	2	2	SM15/64″×28
B44	HA100D2110	竖轴轴套(上)	Vertical shaft bushing (upper)	1	1	
B45	H2100D2010	竖轴	Vertical shaft	1	1	
B46	HA600D2010	竖轴轴套(下)	Vertical shaft bushing (lower)	1	1	
B47	HA113D2222	竖轴伞齿轮(下)	Bevel gear (lower)	1	1	
B48	HA113D2212	下轴伞齿轮	Bevel gear for hook shaft	1	1	
B49	HFD9098001	牙叉	Feed forked connection	1		
B49	H3800D2020	牙叉	Feed forked connection		1	
B50	HA112D3013	抬牙连杆	Crank rod for feed lifting rock sha	1	1	
B51	H2100E2010	旋梭定位勾	Rotating hook positioner	1	1	
B52	HA100E2150	旋梭定位勾螺钉	Screw	1	1	SM11/64″×40
B53	HA100E2040	下轴轴套(左)	Hook shaft bushing (left)	1	1	
B54	H6015D8001	下轴	Hook shaft	1	1	
B55	HA704B0653	下轴轴套(中)	Hook shaft bushing	1	1	
B56	HA305E0662	下轴紧圈螺钉	Set screw	2	2	SM15/64″×28
B57	HA305E0661	下轴紧圈	Collar for hook shaft	1	1	
B58	HA311E0671	下轴轴套(右)	Hook shaft bushing (right)	1	1	
B59	HA110E0672	下轴轴套油管	Oil pipe	1	1	
B60	HA300E2100	柱塞	Plunger	1	1	
B62	H1100E2010	梭芯	Bobbin	1	1	
B63	H6519B8001	旋梭梭芯套组件	Rotating hook complete	1	1	
B64	HA1111E104	下轴滤油塞螺钉	Filter screw	1	1	
B65	HA1111E204	下轴滤油塞	Filter	1	1	
B66	HA700E2030	下轴油封	Oil seal	1	1	
B67	HA100E2060	油量调节弹簧	Spring for oil adjuster	1	1	
B68	HA100E2050	油量调节螺钉	Oil adjusting screw	1	1	
B69	HA710E0691	切线凸轮	Cam	1	1	
B70	HA710E0692	切线凸轮螺钉	Screw	1	1	
B71	HA300E2110	柱塞弹簧	Plunger spring	1	1	
B72	HA600E2020	挡板	Guide plate	1	1	
B73	HA104F0654	挡板螺钉	Screw	1	1	SM15/64″×28
B74	H3406B0671	平衡偏心轮	Blance weight	1	1	
B75	HA100C2020	螺钉	Screw	2	2	SM15/64″×28

WWW.ISKASIUVIMUI.LT

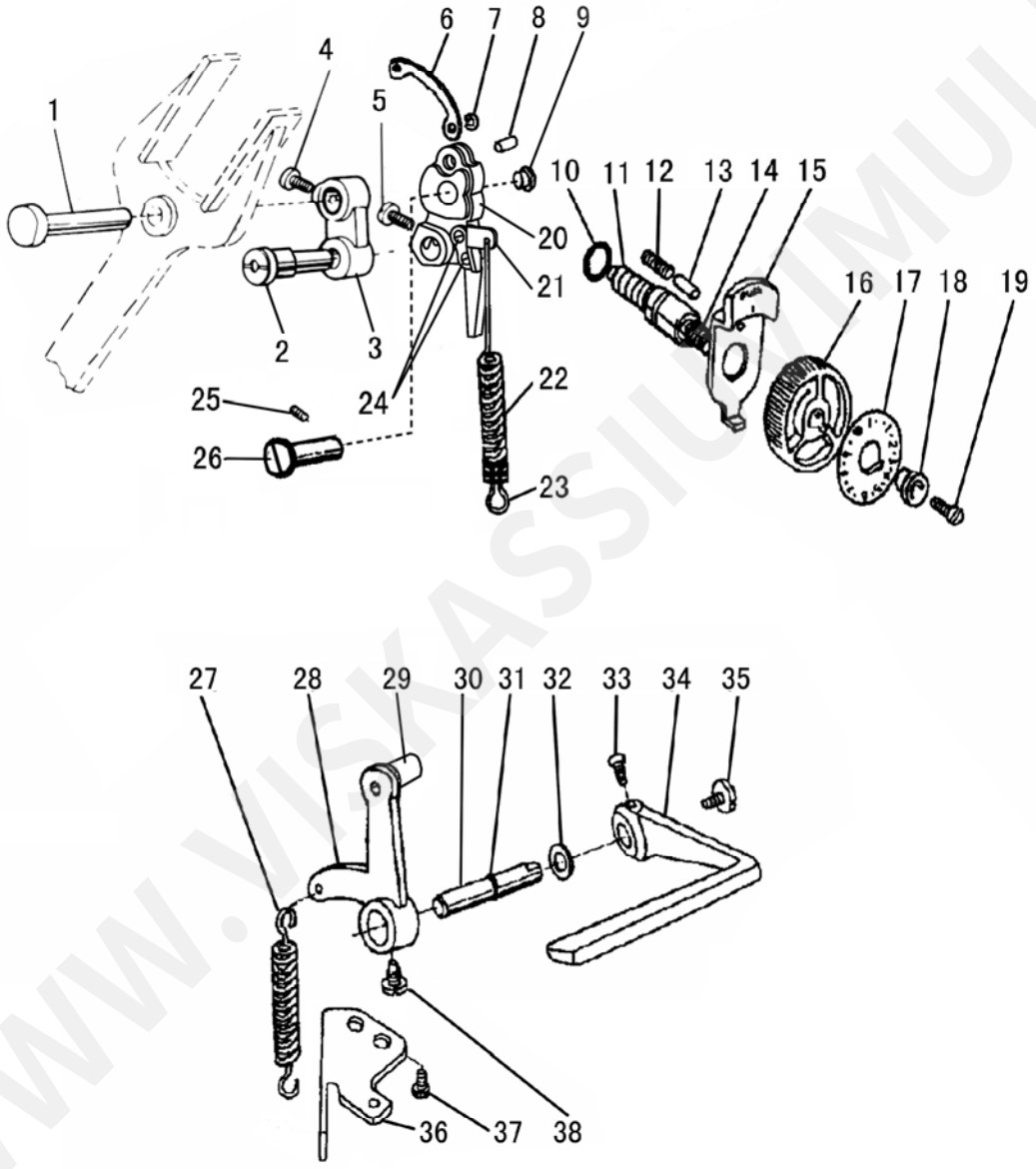

WWW.VISKASSIUVIMUI.LT

C.针距调节部件 STITCH REGULATOR MECHANISM

序号 Fig.No.	样本编号 Part No.	名　　称	Description	DY-850	DY-851	备　注 Remarks
C01	HFD9108001	牙叉铰链轴	Pin	1	1	
C02	H2006C0024	针距连杆铰链轴	Pin	1	1	
C03	HFD9118001	针距连杆	Connecting rod stud	1	1	
C04	HA113F0684	牙叉铰链轴螺钉	Screw	1	1	
C05	HA113F0684	牙叉铰链轴螺钉	Screw	2	2	
C06	HB5255F081	倒针连杆	Reverse link	1	1	
C07	H007013040	开口挡圈	Stop ring	1	1	
C08	H2204D0652	针距座销	Pin	1	1	
C09	H2010B0066	橡皮塞(Φ9.6×5)	Rnbber plug(Φ9.6×5)	1	1	
C10	HA109F0674	针距调节螺杆O型圈	O-ring	1	1	
C11	HA720F0681	针距调节螺杆	Screw bar	1	1	
C12	HA100F2090	止动销弹簧	Spring for stopper pin	1	1	
C13	HA100F2080	止动销	Stopper pin	1	1	
C14	HA720F0687	针距按键簧	Coil spring	1	1	
C15	HA720F0683	针距标盘定位板	Stopper pin releasing lever	1	1	
C16	HA7421F120	针距标盘	Dial	1	1	
C17	HFF9128001	标盘面板	Plate for stitch length	1		
C17	HB5253F081	标盘面板	Plate for stitch length		1	
C18	HA720F0685	标盘螺钉衬套	Bushing	1	1	
C19	HA720F0686	标盘螺钉	Screw	1	1	
C20	HFF9068001	针距调节摆杆	Feed regulator	1	1	
C21	HFF9078001	拉簧架(上)	Spring retainer	1	1	
C22	HFF9058001	针距调节摆杆拉簧	Spring	1	1	
C23	HA806C0675	送布调节摆杆拉簧钩	Spring retainer	1	1	
C24	HA100C2190	针距调节摆杆拉簧架螺钉	Screw	2	2	
C25	HA110D0672	针距调节摆杆轴套螺钉	Screw	1	1	
C26	HDF6068001	针距调节摆杆铰链轴	Pin	1	1	
C27	H2600E2050	倒缝操纵杆曲柄弹簧	Spring	1	1	
C28	HFF9098001	倒缝操纵杆曲柄	Reverse feed crank	1	1	
C29	H2207D0671	倒缝操纵杆曲柄轴	Slide block pin	1	1	
C30	HFF9148001	倒缝操纵杆短轴	Reverse feed lever shaft	1	1	
C31	HA113F3022	倒缝操纵杆短轴O型圈	O-ring	1	1	
C32	HA100F2110	倒缝操纵杆垫圈	Washer	1	1	
C33	HA104F0654	倒缝操纵杆螺钉	Screw	2	2	
C34	HN105F8001	倒缝操纵杆	Reverse feed lever	1	1	
C35	HA113F0683	倒缝操纵杆吊紧螺钉	Screw	1	1	
C36	HA800F2010	弹簧架	Spring holder	1	1	
C37	HA800F2020	弹簧架螺钉	Screw	1	1	
C38	HA100F2130	倒缝操纵杆曲柄螺钉	Screw	1	1	SM15/64″×28

WWW.KASIUVIMUI.LT

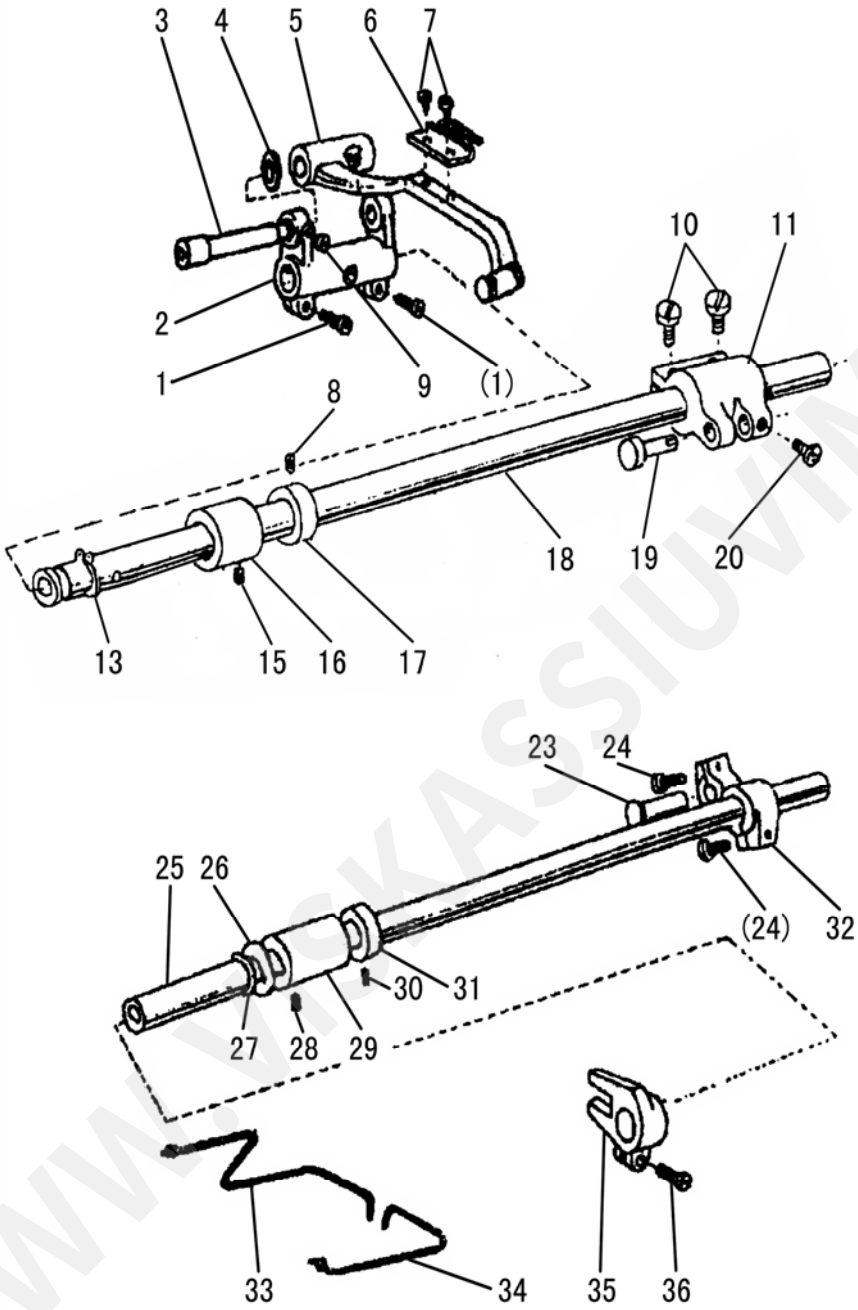

WWW.VISKASSIUVIMUI.LT

D.送料、抬牙部件 FEEDING AND FEED LIFTING MECHANISM

序号 Fig.No.	样本编号 Part No.	名　　称	Description	DY-850	DY-851	备　注 Remarks
D01	HA104G0012	送布轴曲柄螺钉	Screw	2	2	
D02	HA104G0011	牙架曲柄	Crank	1	1	
D03	HA705J0654	牙架曲柄偏心轴	Eccentric shaft	1	1	
D04	HA104G0656	牙架曲柄轴垫圈	Washer	1	1	
D05	HFG9068001	牙架	Feed bar	1	1	
D06	HFG9098001	送布牙	Feed dog	1		
D06	HA104G0653	送布牙	Feed dog		1	
D07	HA104G0654	送布牙螺钉	Screw	2	2	
D08	HA105D0662	送布轴紧圈螺钉	Set screw	2	2	SM1/4″×40
D09	HA300C2030	牙架轴螺钉	Screw	1	1	
D10	HA104G0012	送布轴曲柄螺钉	Screw	2	2	
D11	H2100G2030	送布轴曲柄	Feed rock shaft crank	1	1	
D13	H007009150	轴用弹性挡圈	C-type stop ring	1	1	
D15	HA305E0662	送布轴轴套螺钉	Set screw	1	1	SM15/64″×28
D16	HA100G2040	送布轴轴套	Bushing for feed rock shaft	1	1	
D17	HA108G0661	送布轴紧圈	Collar	1	1	
D18	H6006D8001	送布轴	Feed rock shaft	1	1	
D19	H2100G2040	送布轴曲柄铰链轴	Hinge pin	1	1	
D20	HA104F0654	送布轴曲柄铰链轴螺钉	Screw	1	1	
D23	HA100G2070	抬牙轴曲柄铰链轴	Hinge pin	1	1	
D24	HA104G0012	抬牙轴曲柄(右)螺钉	Screw	2	2	SM3/16″×28
D25	H6013D8001	抬牙轴	Feed lifting rock shaft	1	1	
D26	HA100G2130	抬牙轴轴套垫圈	Washer	1	1	
D27	H007009150	轴用弹性挡圈	C-type stop ring	1	1	
D28	HA100C2020	抬牙轴轴套螺钉	Set screw	1	1	SM15/64″×28
D29	HA100G2120	抬牙轴轴套	Bushing	1	1	
D30	HA105D0662	抬牙轴紧圈螺钉	Screw	2	2	SM1/4″×40
D31	HA108G0661	抬牙轴紧圈	Collar	1	1	
D32	HA306G0671	抬牙轴曲柄(右)	Crank(right)	1	1	
D33	HA304G0655	牙架曲柄油线	Oil braid	1	1	
D34	HA305G0664	抬牙轴曲柄左油线	Oil braid	1	1	
D35	HFG9088001	抬牙曲柄	Guide crank	1	1	
D36	HA111G0683	抬牙曲柄螺钉	Screw	1	1	

WWW.SIUVIMUI.LT

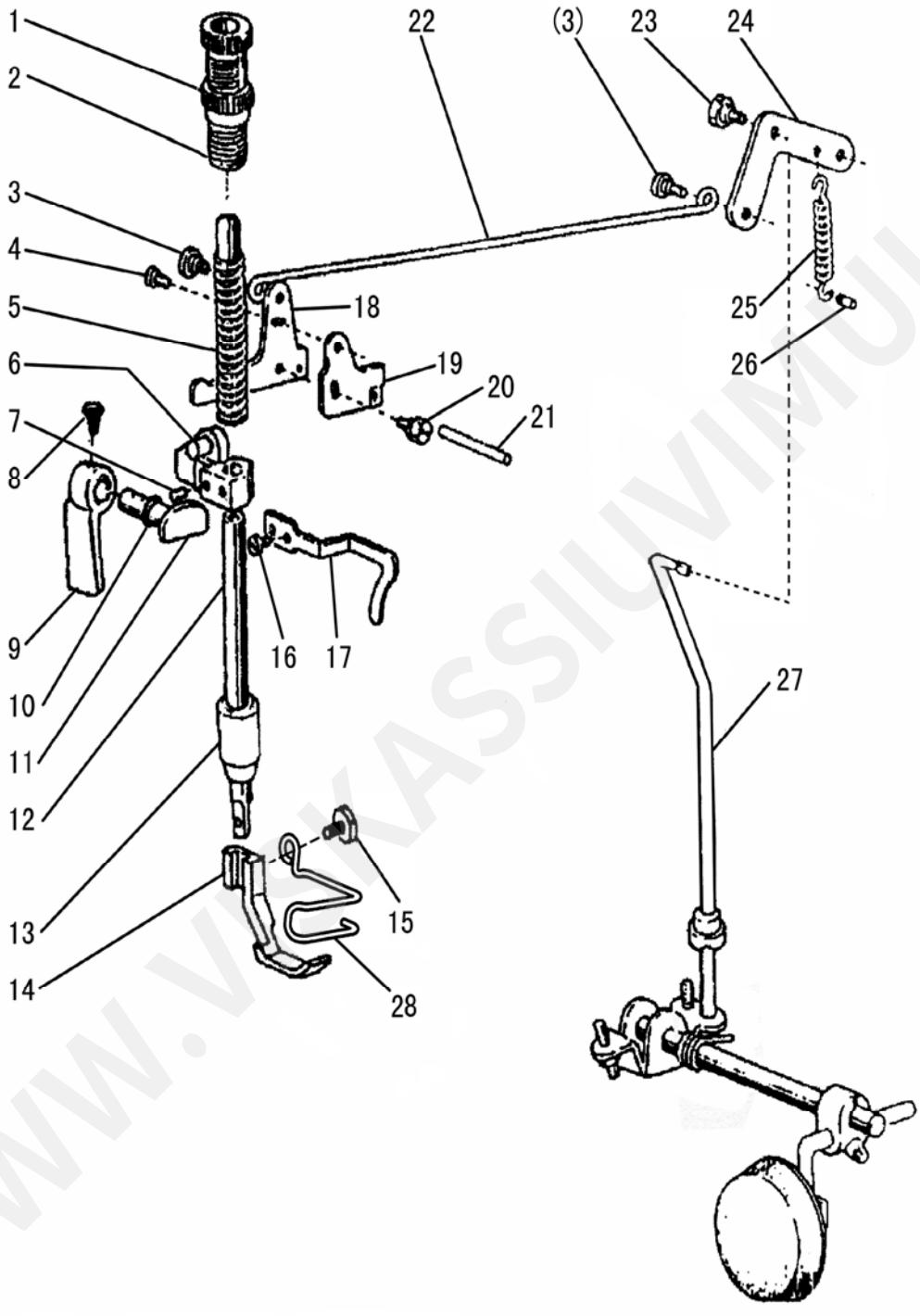

WWW.VYKASIUVIMUI.LT

E.压脚部件 PRESSER FOOT MECHANISM

序号 Fig.No.	样本编号 Part No.	名　　称	Description	DY-850	DY-851	备　注 Remarks
E01	HA117H0692	调压螺钉锁紧螺母	Lock nut	1	1	
E02	H2005I0065	调压螺钉	Pressure regulating thumb screw	1	1	
E03	HA107H0662	铰链螺钉	Hinged screw	2	2	
E04	HA107H1013	膝控提升杠杆(左)螺钉	Screw	1	1	
E05	H1100H2020	压紧杆弹簧	Presser spring	1	1	
E06	HM305H8001	压紧杆导架	Presser bar lifting bracket	1	1	
E07	HA3411D308	压紧杆导架螺钉	Set screw	1	1	SM15/64″×28
E08	HA100B2110	压脚扳手螺钉	Set screw	1	1	
E09	H2104H0651	压脚扳手	Presser bar lifter	1	1	
E10	HA300H2080	压紧杆提升凸轮O型圈	O-ring	1	1	
E11	H2104H0661	压紧杆提升凸轮	Presser bar lifting cam	1	1	
E12	H2000I2010	压紧杆	Presser bar	1	1	
E13	HA300H2090	压紧杆轴套	Presser bar bushing	1	1	
E14	H3800H2020	内压脚	Vibrating presser foot	1	1	
E15	HA100H2150	油线固定板螺钉	Screw	1	1	SM9/64″×40
E16	HA100C2190	大线勾螺钉	Screw	1	1	SM11/64″×40
E17	HA300H2120	大线勾	Upper thread guide	1	1	
E18	HA107H1011	膝控提升杠杆(左)	Knee lifter lever (left)	1	1	
E19	HA305H6611	松线凸轮	Tension releasing cam	1	1	
E20	HA100H2050	松线凸轮螺钉	Bolt	1	1	
E21	HA700I2070	松线杆	Tension releasing pin	1	1	
E22	H6013H8001	膝控提升拉杆	Knee lifter rod	1	1	
E23	HA100H2050	膝控提升杠杆(右)螺钉	Bolt for knee lifter lever	1	1	SM15/64″×28
E24	HA110H0671	膝控提升杠杆(右)	Knee lifter lever (right)	1	1	
E25	H3211E0692	膝控提升杠杆(右)弹簧	Spring	1	1	
E26	HA720B0651	弹簧销	Pin for spring	1	1	
E27	HFH9068001	膝控提升连杆	Knee lifter connecting rod	1	1	
E28	H2000I2230	压脚防护罩	Walking foot guard cover	1	1	

WWW.VISKASSIUVIMUI.LT

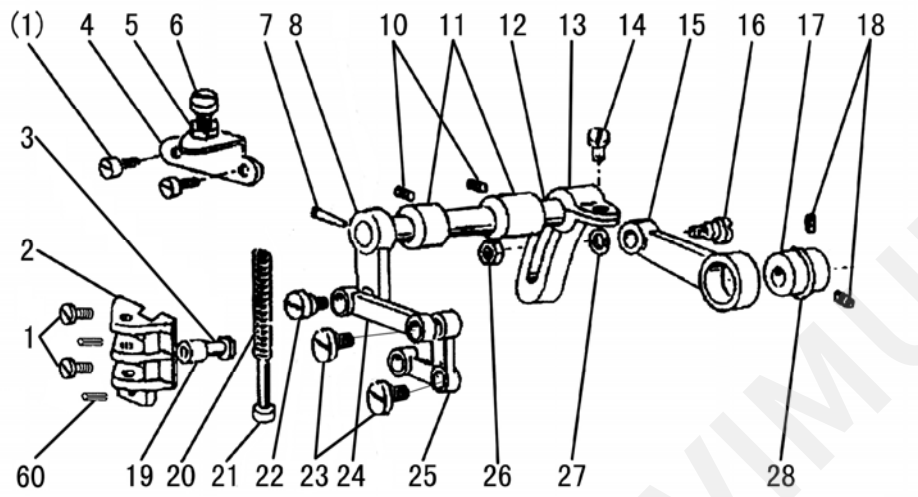

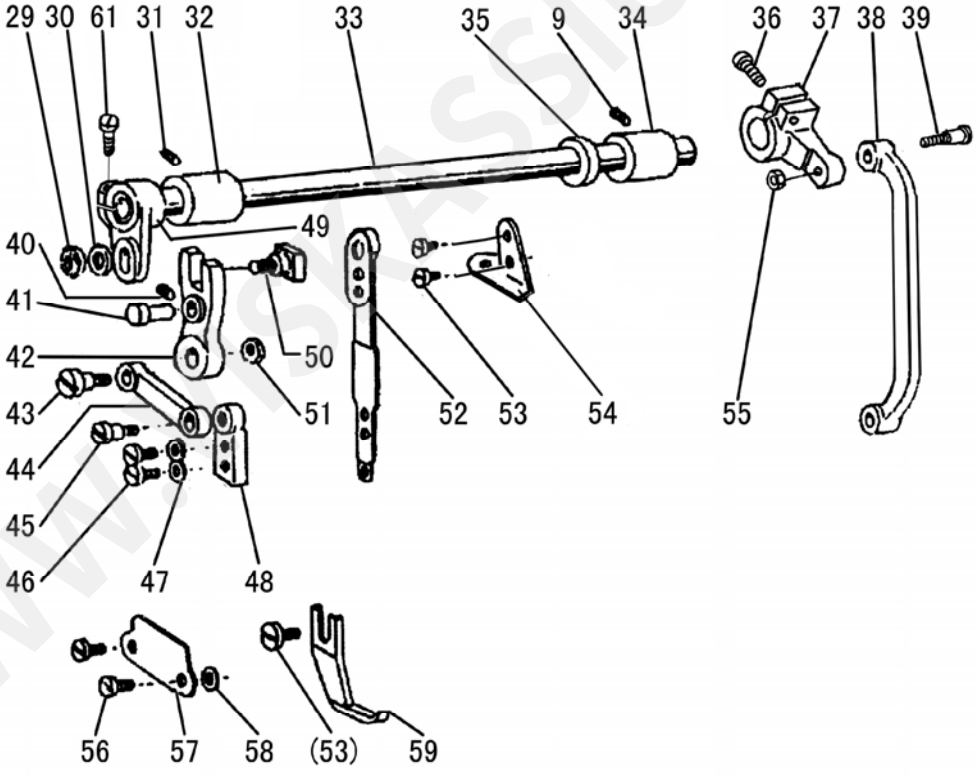

WWW.SIUVIMUI.LT

F.压脚提升、摆动部件 PRESSER LIFTING & FEEDING MECHANISM

序号 Fig.No.	样本编号 Part No.	名　　称	Description	DY-850	DY-851	备　注 Remarks
F01	HA300C2030	挑线杆防护罩螺钉	Screw	4	4	
F02	H2000J2020	提升压脚导位板	Lifting presser plate	1	1	
F03	H2004J0655	送料曲柄导柱轴	Feed crank guide shaft	1	1	
F04	H2000J2060	提升压脚弹簧架	Lifting presser bracket for spring	1	1	
F05	H2010J0066	提升压脚调节螺母	Lifting presser adjusting nut	1	1	
F06	H2010J0065	提升压脚调节螺钉	Lifting presser adjusting screw	1	1	
F07	H602040200	圆锥销	Pin	1	1	
F08	H2011J0065	压脚提升曲柄	Presser lifting crank	1	1	
F09	H3000D2030	紧固螺钉	Set screw	1	1	
F10	HA100B2110	压脚提升轴轴套螺钉	Screw	2	2	
F11	H2009B0068	压脚提升轴轴套	Presser lifting shaft bushing	2	2	
F12	H2011J0066	压脚提升轴	Shaft	1	1	
F13	H2100I2010	偏心连杆调节曲柄	Presser lifting shaft	1	1	
F14	H2012N0652	偏心连杆调节曲柄螺钉	Set screw	1	1	
F15	H2104I0065	偏心轮连杆	Eccentric wheel rod	1	1	
F16	H2000J2100	偏心轮连杆螺钉	Set screw	1	1	
F17	H2014J0652	偏心轮	Eccentric wheel	1	1	
F18	HA307C0662	偏心轮螺钉	Screw	2	2	
F19	H2000J2030	提升压脚簧导柱轴滚柱	Lifting presser spring guide pin	1	1	
F20	H2100I2190	提升压脚簧	Lifting presser spring	1	1	
F21	H2007J0066	压脚簧导柱	Presser spring guide	1	1	
F22	H2004J0662	压脚送料曲柄连杆螺钉	Screw	1	1	
F23	H2004J0653	压脚送料曲柄螺钉	Screw	2	2	
F24	H2100I2130	压脚送料曲柄连杆	Presser feed crank link	1	1	
F25	H2100I2020	压脚送料曲柄	Presser feed crank	1	1	
F26	H0030020608	六角螺母	Nut	1	1	M6× 0.75
F27	H2013J0065	垫圈	Washer	1	1	
F28	H007009250	轴用C型挡圈	C-type stop ring	1	1	
F29	H2013N0067	压脚曲柄连接螺母	Presser crank connecting nut	1	1	
F30	H2013J0065	压脚曲柄连接垫圈	Washer	1	1	
F31	HA100B2110	压脚摆动轴套螺钉	Screw	1	1	
F32	H2100I2060	压脚摆动轴轴套(左)	Presser swing shaft bushing (left)	1	1	
F33	H6007F8001	压脚摆动轴	Presser swing shaft	1	1	
F34	HM312I8001	压脚摆动轴轴套	Presser swing shaft bushing	1	1	
F35	HM310I7101	油封	Oil seal	1	1	
F36	H6017F8001	压脚摆动曲柄(右)螺钉	Screw	1	1	
F37	H6013F8001	压脚摆动曲柄(右)	Presser swing crank(right)	1	1	
F38	H2100I2030	压脚摆动曲柄(右)连杆	Presser swing crank (right) rod	1	1	
F39	H2012N0066	压脚摆动曲柄(右)连杆螺钉	Screw	1	1	
F40	H2100I2070	提升压脚变动曲柄导柱螺钉	Screw	1	1	
F41	H2013N0066	提升压脚变动曲柄导柱	Guide pin	1	1	
F42	H2013N0069	提升压脚变动曲柄	Lifting presser sway crank	1	1	

WWW.YISKASIUVIMUI.LT

F.压脚提升、摆动部件 PRESSER LIFTING & FEEDING MECHANISM

序号 Fig.No.	样本编号 Part No.	名　　称	Description	DY-850	DY-851	备　注 Remarks
F43	H2100I2140	压脚送料变动连接螺钉	Screw	1	1	
F44	H2013N0070	提升压脚变动曲柄连杆	presser lifting connecting rod	1	1	
F45	H2004J0662	压脚送料曲柄连杆螺钉	Screw	1	1	
F46	H2004J0067	摆动连杆座螺钉	Screw	2	2	
F47	HA100I2050	摆动连杆座螺钉垫圈	Washer	2	2	
F48	H2004J0661	摆动连杆座	Presser rod guide	1	1	
F49	H6006F8001	压脚摆动曲柄(左)	Presser swing crank	1	1	
F50	H2121I0065	提升压脚变动曲柄轴组件	Crank shaft compl assy	1	1	
F51	H2008N0066	压脚送料变动连接螺母	Lock nut	1	1	
F52	H2004J0654	压脚连杆	Presser rod	1	1	
F53	H2000I2050	压脚螺钉	Screw	3	3	
F54	H2004J0658	提升压脚导柱定位板	Lifting presser guide plate	1	1	
F55	H2010J0066	提升压脚调节螺母	Lifting presser adjusting nut	1	1	
F56	HA111G0683	提升压脚连杆压板螺钉	Screw	2	2	
F57	H2000N0030	提升压脚连杆压板	Lifting presser rod plate	1	1	
F58	H2000N0040	压脚连杆压板垫块	Space for presser rod plate	2	2	
F59	HFI9058001	外压脚	Out presser foot	1	1	
F60	H609030080	弹性圆柱销	Pin	2	2	
F61	H6017F8001	压脚摆动曲柄(左)螺钉	Screw	1	1	SM15/64″×28

WWW.VISKASSIUVIMUI.LT

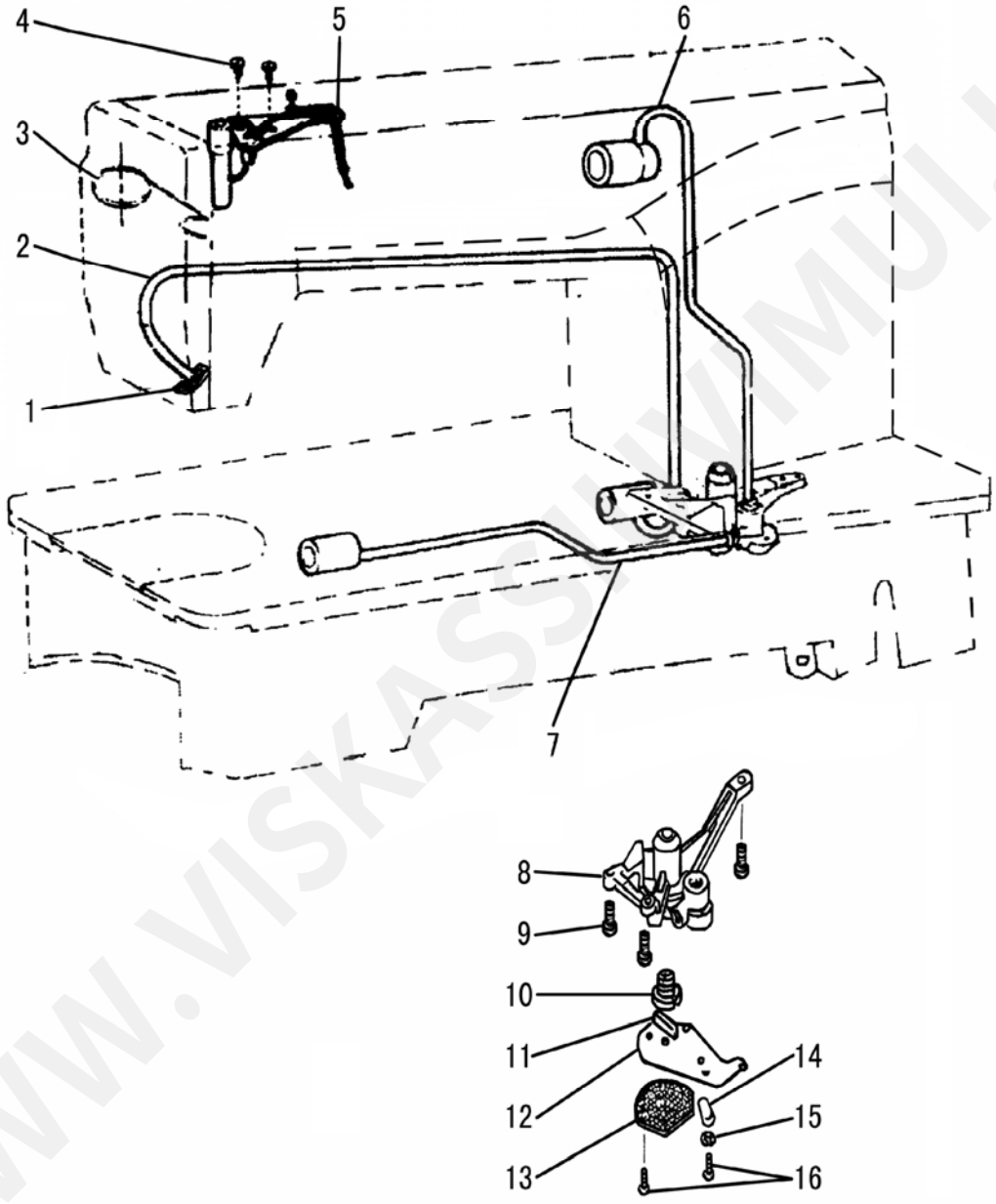

WWW.VISKASSIUVIMUI.LT

G.润滑部件 OIL LUBRICATION MECHANISM

序号 Fig.No.	样本编号 Part No.	名　　称	Description	DY-850	DY-851	备　注 Remarks
G01	HA100I2150	回油管滤油毡	Felt pouch	1	1	
G02	H6018I8001	回油管	Oil return pipe	1	1	3×650
G03	HA300I2060	回油管弹簧夹	Pipe holder	1	1	
G04	HA100H2150	油线固定板螺钉	Screw	2	2	SM9/64″×40
G05	H2104J0065	油线固定板大组件	Oil braid fitting plate	1	1	
G06	H5604G0065	上轴油管组件	Oil pipe for arm shaft	1	1	
G07	H6013I7101	下轴油管组件	Oil pipe for hook shaft	1	1	
G08	H6006I8001	油泵体	Oil pump body	1	1	
G09	HA100I2090	油泵体螺钉	Screw	3	3	
G10	H6010I8001	油泵体叶轮	Oil pump impeller	1	1	
G11	H6011I8001	油泵体叶轮滑块	Impeller slide	1	1	
G12	H6012I8001	油泵体盖板	Oil pump fitting plate	1	1	
G13	HA111I0065	油泵体滤网组件	Oil pump screen complete	1	1	
G14	H6021I8001	油量调节板	Oil adjusting plate	1	1	
G15	HA100I2050	油泵调节板螺钉弹簧垫圈	Spring washer	1	1	
G16	HA300I2050	油泵调节板螺钉	Screw	3	3	

WWW.VISKASSIUVIMUI.LT

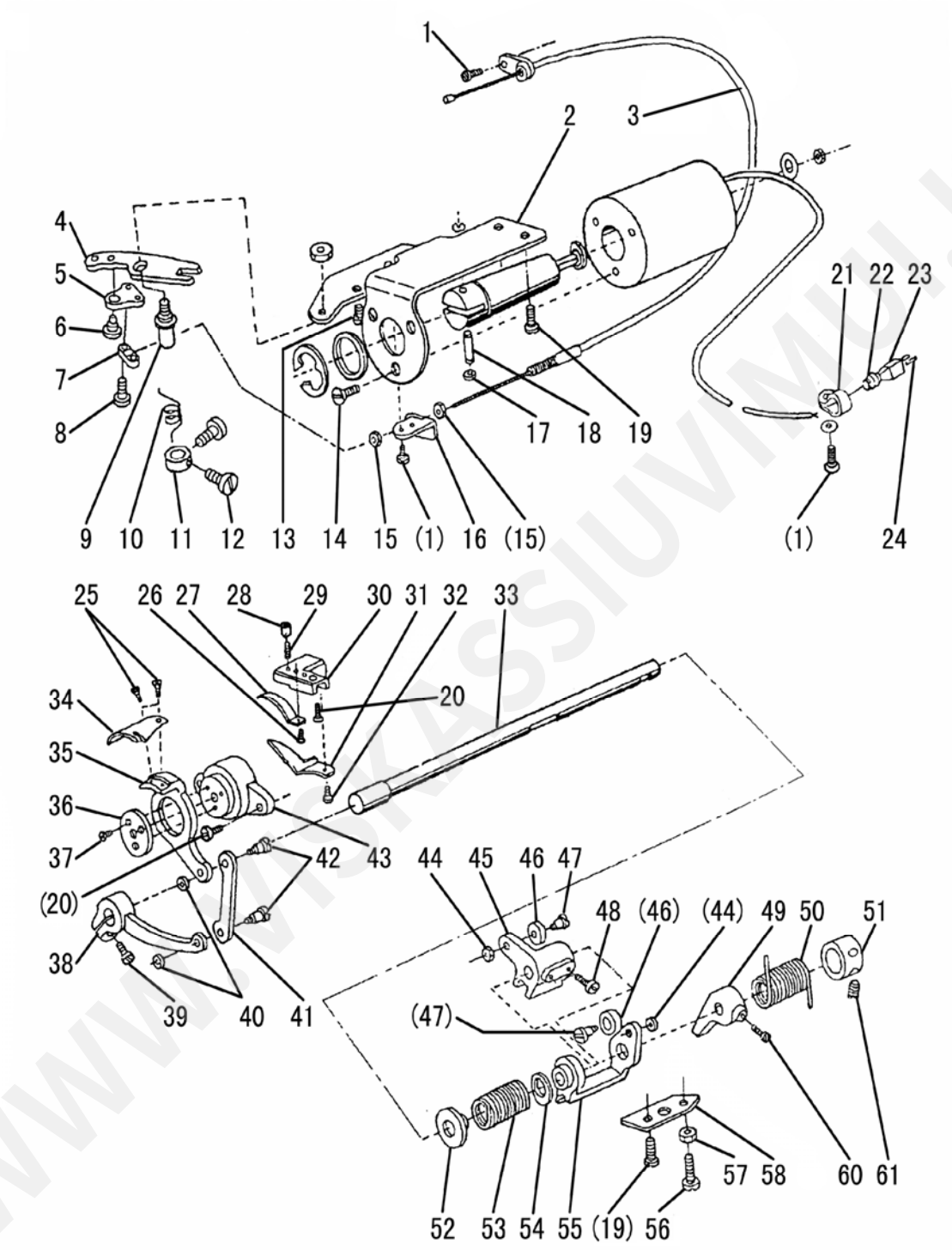

WWW.SKASIUVIMAS.LT

H.剪线部件 THREAD TRIMMER MECHANISM

序号 Fig.No.	样本编号 Part No.	名　　称	Description	DY-850	DY-851	备　注 Remarks
H01	HA300B2170	尼龙夹螺钉组件	Screw group	5	5	
H02	HA7511N212	剪线电磁铁安装架	Solenoid bracket	1	1	
H03	H6005J8001	软线	Flexible wire	1	1	
H04	HA712N0698	驱动板	Thread trimmer driving plate	1	1	
H05	HA712N6910	软线支撑板	Flexible wire bracket	1	1	
H06	HA712N0699	软线支撑板螺钉	Set screw	1	1	
H07	HA712N6911	软线连板	Link bracket	1	1	
H08	HA712N6912	软线连板螺钉	Set screw	2	2	
H09	HA712N0695	驱动板轴	Stud screw	1	1	
H10	HA712N0697	驱动板弹簧	Spring	1	1	
H11	HA712N0696	驱动板轴紧圈	Collar	1	1	
H12	HA7311CC06	压板螺钉	Set screw	2	2	
H13	HA100E2150	旋梭定位勾螺钉	Set screw	1	1	
H14	HA7511N312	P型螺钉	P-type screw	3	3	
H15	H003002050	软线螺母	Nut M5	2	2	
H16	H2600H2080	软线座	Holder	1	1	
H17	H007013040	开口挡圈	E-type ring	2	2	
H18	HA712N0692	剪线电磁铁销	Pin	1	1	
H19	HA700N0080	检测器架螺钉	Set screw	4	4	
H20	HA300C2030	挑线杆防护罩螺钉	Set screw	4	4	
H21	HA708P0668	尼龙夹HP-3N	Cord holder	1	1	
H22	HA70400657	橡皮衬套	Rubber plug	1	1	
H23	HA700Q0010	插头	Connector plug	2	2	
H24	HA7641B319	接头	Connector	2	2	
H25	HA7111N704	刀片紧固螺钉	Set screw	1	1	
H26	HA7121N304	定刀片螺钉	Set screw	1	1	
H27	H22121H104	定刀片	Fixed blade	1	1	
H28	HA7121N704	定刀座螺母	Nut	1	1	
H29	HA7121N604	定刀座螺钉	Set screw	1	1	
H30	HA7121N104	定刀座	Bracket for fixed blade	1	1	
H31	H22121H204	拦线板	Thread finger	1	1	
H32	HA7311CH06	拦线板螺钉	Set screw	1	1	
H33	HA900N0020	凸轮曲柄轴	Knife driving shaft	1	1	
H34	H2806H8001	动刀片	Movable knife	1	1	
H35	H2809H8001	刀架(左)	Knife holding bracket saddle (left	1	1	
H36	HA704N1113	刀架垫圈	Washer	1	1	
H37	HA704N1114	刀架螺钉	Set screw	3	3	
H38	HA7111N604	剪线电磁铁驱动曲柄	Knife driving crank	1	1	
H39	HA719B7011	驱动曲柄螺钉	Set screw	1	1	
H40	HA7111N304	刀轴连杆螺母	Nut	2	2	
H41	HA7111N404	刀轴连杆	Link	1	1	
H42	HA7111N204	刀轴连杆螺钉	Set screw	2	2	

WWW.VISKASIUVIMUI.LT

H.剪线部件 THREAD TRIMMER MECHANISM

序号 Fig.No.	样本编号 Part No.	名　　称	Description	DY-850	DY-851	备　注 Remarks
H43	HA704N1111	刀架	Knife holding bracket saddle	1	1	
H44	HA706N0663	滚柱螺母	Nut	2	2	
H45	HA7211N106	凸轮曲柄1	Cam follower crank 1	1	1	
H46	HA7221N106	凸轮曲柄滚柱	Roller	2	2	
H47	HA7221N206	凸轮曲柄滚柱轴	Roller stud	2	2	
H48	HA113F0684	凸轮曲柄螺钉	Set screw	2	2	
H49	HA906N0661	限位块	Stopper lever	1	1	
H50	HA700N0110	剪线凸轮轴扭簧	Coil spring	1	1	
H51	HA715N0711	剪线凸轮轴紧圈	Collar with screw	1	1	
H52	HA700N0050	扭簧端盖	Brshing	1	1	
H53	HA700N0040	凸轮曲柄轴弹簧（左）	Coil spring	1	1	
H54	HA706N0664	曲柄轴垫圈	Washer	1	1	
H55	HA7211N206	凸轮曲柄2	Cam follower crank 2	1	1	
H56	HA7411N110	止动螺钉	Set screw	1	1	SM15/64″×28
H57	HA710N0683	止动螺母	Nut	1	1	
H58	HA710N0682	止动板	Lever stopper plate	1	1	
H60	HA113F0684	限位块螺钉	Set screw	1	1	
H61	HA105D0662	紧圈螺钉	Set screw	1	1	

WWW.VISKASSIUVIMUI.LT

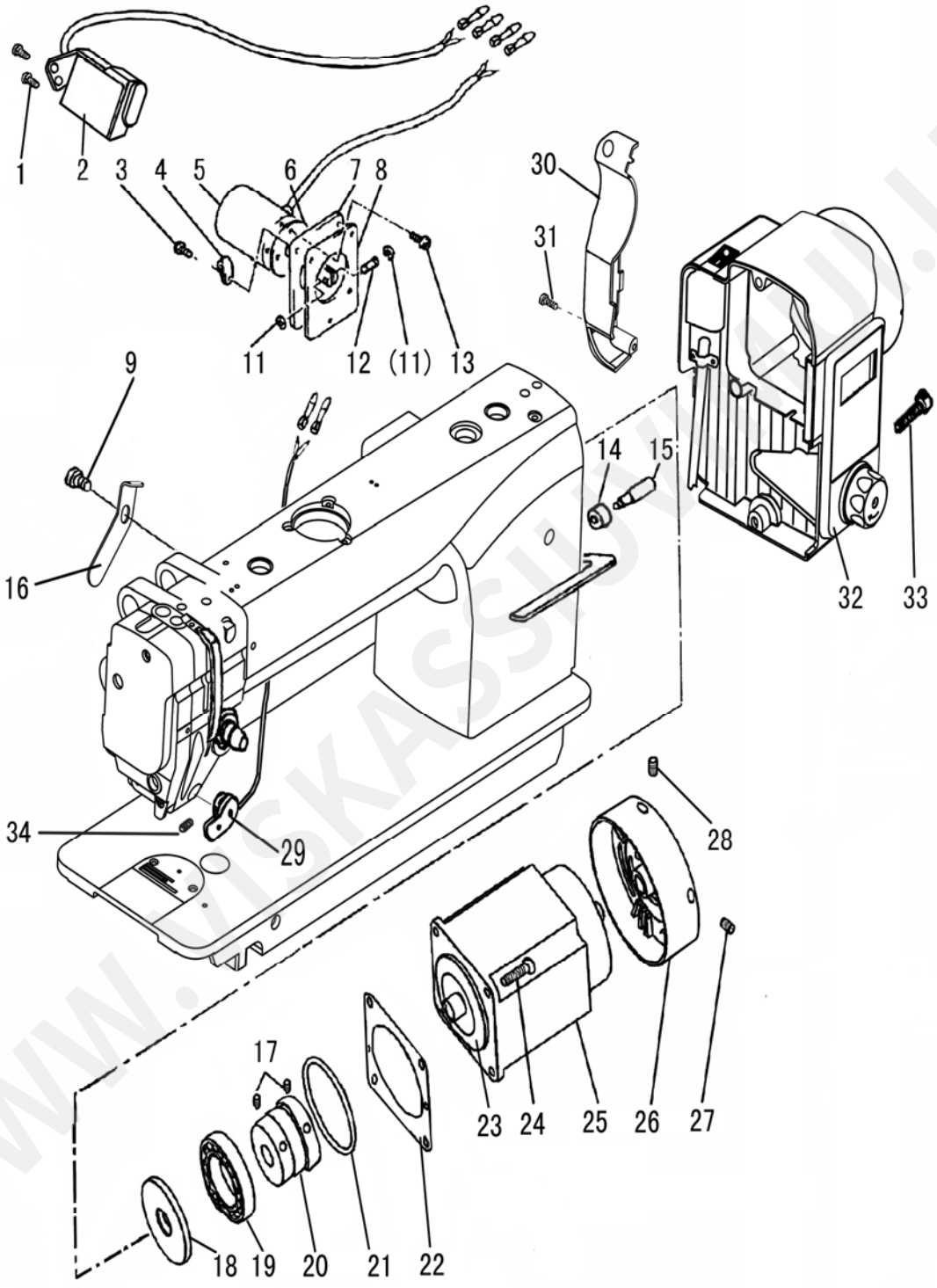
1
2
3
4
5
6
7
8
9
11
12
(11)
13
14
15
16
17
18
19
20
21
22
23
24
25
26
27
28
29
30
31
32
33
34

I.倒缝、上轮部件 TOUCH BACK MECHANISM & MOTOR MECHANISM

序号 Fig.No.	样本编号 Part No.	名　　称	Description	DY-850	DY-851	备　注 Remarks
I01	HD15B58001	螺钉	Screw	2	2	M5×6
I02	HFK9047101	倒缝开关组件	Backstitch switch assy	1	1	
I03	HA300B2170	后盖板螺钉	Screw	5	5	
I04	H6648I8001	尼龙夹AB-6N	Cord holder	1	1	
I05	HFK9067101	倒缝电磁铁	Solenoid assay for touch black	1	1	
I06	H2609E0674	倒缝电磁铁垫圈	Washer	1	1	
I07	H6010K8001	后盖板	Arm bed cover	1	1	
I08	H6011K8001	后盖板垫片	Gasket for arm bed cover	1	1	
I09	HA300B2160	尼龙夹螺钉	Screw	3	3	
I11	H007013040	开口档圈	E-type ring	2	2	
I12	HA712N0692	剪线电磁铁销	Pin	1	1	
I13	HA300B2160	面板螺钉	Screw	4	4	SM11/64″×40
I14	H2204G0652	操纵杆限位圈	Rubber plug	1	1	
I15	H2204G0651	操纵杆限位螺钉	Screw	1	1	
I16	HY92L68001	导线固定夹	Upper shaft cap set	1	1	
I17	H431060080	联轴器螺钉	Screw	2	2	M6×8
I18	HY93L17101	上轴轴套(右)油封	Oil seal	1	1	
I19	HY93L68001	深沟球轴承（6807ZZ）	Connect block (6807ZZ)	1	1	
I20	HFL9098001	联轴器	Coupling	1	1	
I21	HY92L48001	密封圈	Ring	1	1	
I22	HY92L18001	后套座防油垫	Oil pad	1	1	
I23	HFL9058001	电机垫片	Motor pad	1	1	
I24	H415050200	螺钉	Screw	4	4	M5×20
I25	HFL9048001	直驱电机	Motor	1	1	
I26	HFL9068001	上轮组件	Round of the components	1	1	
I27	H7206E8001	螺钉	Screw	1	1	SM15/64×28
I28	H3416D0692	定位螺钉	Screw	1	1	SM15/64×28
I29	HFK9077101	夹线电磁铁组件	Clamp solenoid assy	1	1	
I30	HFL9128001	防护罩	Shield	1	1	
I31	H410040100	十字槽小盘头螺钉	Screw	2	2	M4×10
I32	HFL9107101	马达罩组件	Motor cover assy	1	1	
I33	H415050300	马达罩螺钉	Screw	4	4	M5×30
I34	H3410C3019	内六角紧定螺钉	Screw	1	1	SM9/64×40

WWW.VISKASIUVIMUI.LT

J.气动抬压脚(特殊订货) PNEUMATIC PRESSER FOOT（SPECIAL ORDER)

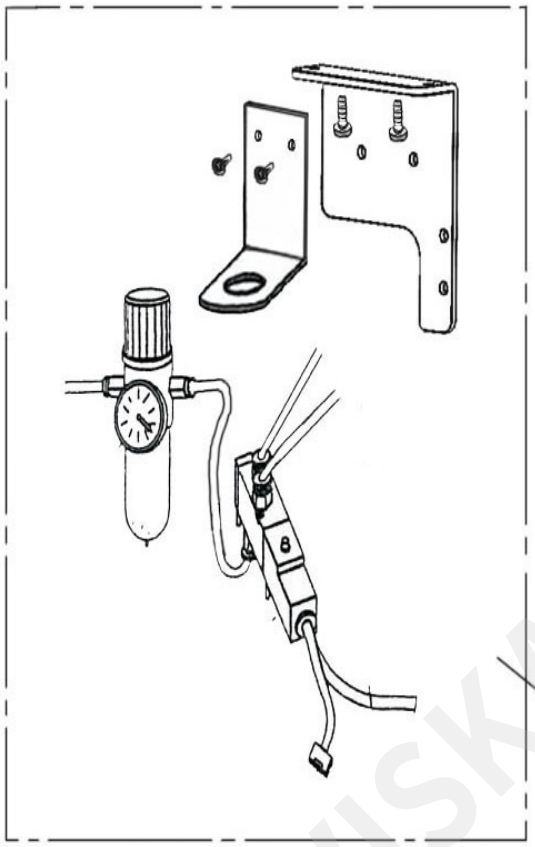

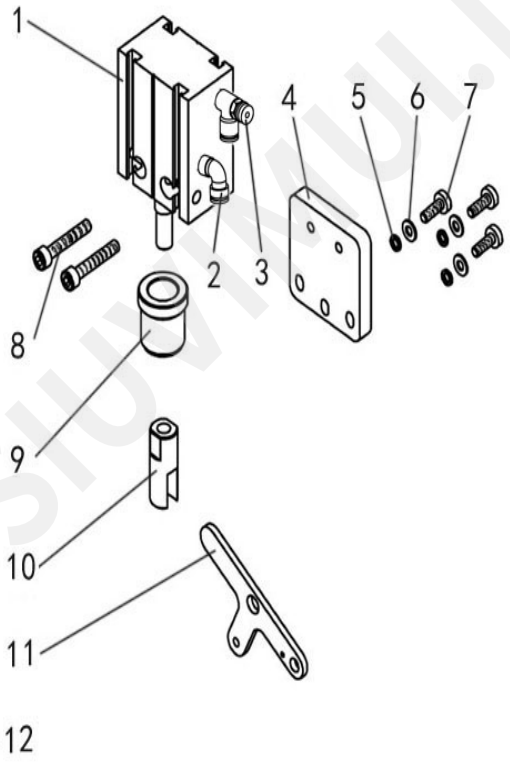

WWW.VISKASSIUVIMUI.LT

J.气动抬压脚(特殊订货) PNEUMATIC PRESSER FOOT（SPECIAL ORDER)

序号 Fig.No.	样本编号 Part No.	名　　称	Description	DY-850	DY-851	备　注 Remarks
J01	H4905E8001	多位置固定气缸	Cylinder	1	1	MD25×20
J02	H4916G0800	快插接头(弯头)	Joint	1	1	Φ6-M5
J03	H0608N8001	调速阀	Speed regulating joint	1	1	Φ6-M5
J04	HFH9098001	气缸安装板	Mounting plate	1	1	
J05	H005001040	平垫圈（黑）	Flat washer	3	3	
J06	HA720F0684	标准弹簧垫圈	Spring washer	3	3	
J07	HA100I2090	油泵体螺钉	Screw	3	3	SM11/64″×40/13
J08	H415050300	内六角圆柱头螺钉	Screw	2	2	
J09	HFH9118001	膝控导向套	Axle sleeve	1	1	
J10	HFH9108001	气缸接头	Cylinder connector	1	1	
J11	HFH9128001	膝控提升杠杆(右)	Knee lifter lever (right)	1	1	
J12	GJD-1-4	过滤减压阀及电磁阀组件	Solenoid valve assembly	1	1	

WWW.VISKASSIUVIMUI.LT

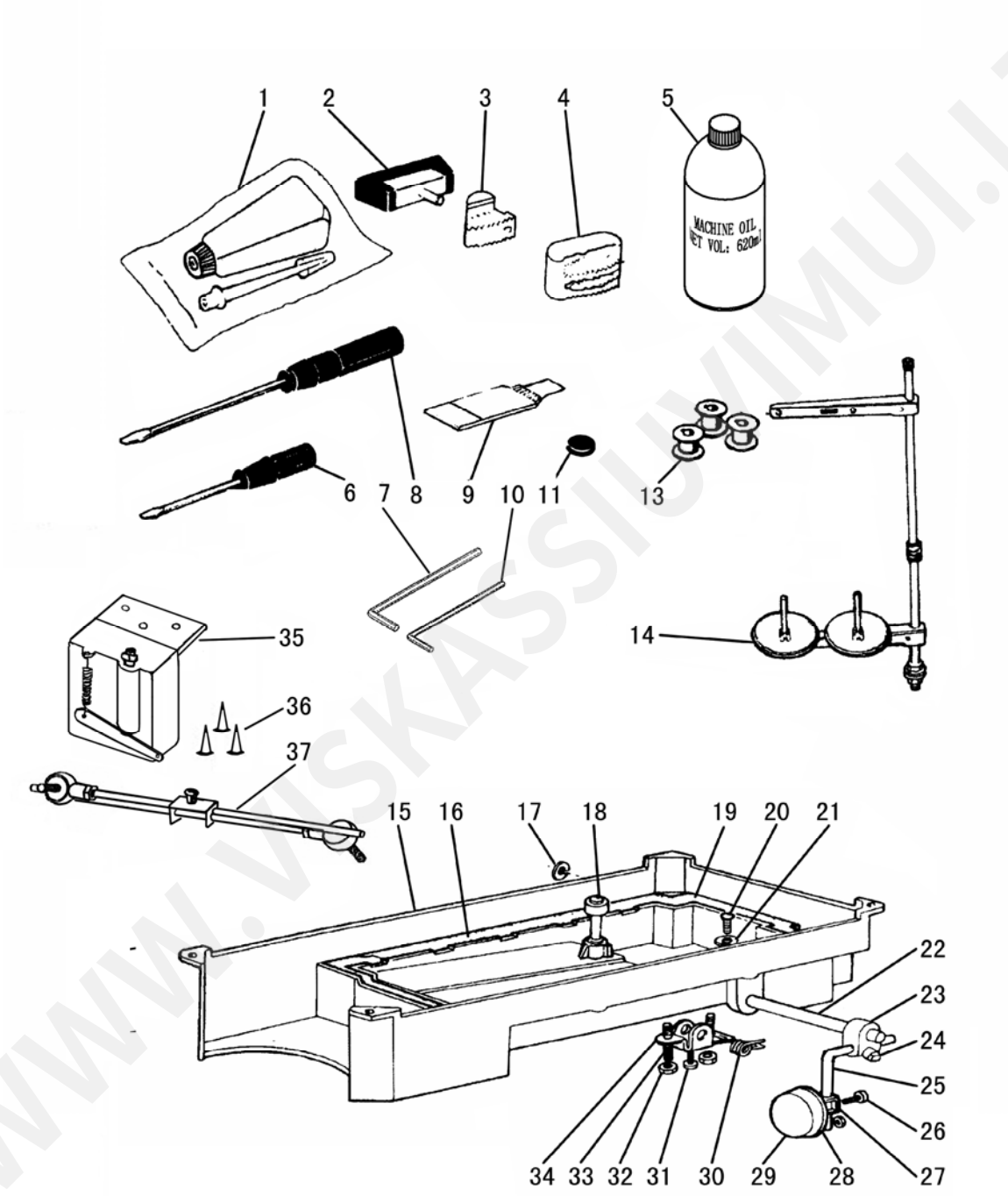

WWW.VISKASSIUVIMUI.LT

K.附件 ACCESSORIES

序号 Fig.No.	样本编号 Part No.	名　　称	Description	DY-850	DY-851	备　注 Remarks
K01	HA100J2110	小油壶	Oiler	1	1	
K02	HA307J0067	机壳铰链组件	Hinge of machine head assy	1	1	
K03	HA300J2060	机头防振垫块(小)	Rubber cushion(small)	2	2	
K04	HA300J2050	机头防振垫块(大)	Rubber cushion(big)	2	2	
K05	HA120J8001	油瓶	Oil container	1	1	
K06	HA300J2210	螺钉起子(小)	Screw driver(short)	1	1	
K07	HB00001030	内六角扳手(3)	Hexagon socket screw key (3)	1	1	
K08	HA300J2070	螺钉起子(大)	Screw driver(long)	1	1	
K09		机针	Needle	4	4	DP×17　#18-#22
K10	HB00001020	内六角扳手(2)	Hexagon socket screw key (2)	1	1	
K11	HA100J2120	磁块	Magnet	1	1	
K13	H1100E2010	梭芯	Bobbin	3	3	
K14	HA200J2030	线架组件	Thread stand assy	1	1	GXJ-2
K15	H6008L8001	油盘	Oil seservoir	1	1	
K16	H6015L8001	油盘垫(大)	Gasket for oil reservoir (big)	1	1	
K17	H007013090	开口挡圈	E-type ring	1	1	
K18	HA106J0661	膝控提升顶杆	Knee lifter lifting rod	1	1	
K19	H6009L8001	油盘垫(小)	Gasket for oil reservoir (small)	1	1	
K20	HA104J0652	放油螺钉	Oil drain screw	1	1	
K21	HA104J0653	放油螺钉垫圈	Washer	1	1	
K22	HA300J2160	膝控铰链轴	Hinge pin for knee lifter	1	1	
K23	HA106J0663	碰块弯杆接头	Joint for knee lifter bell crank	1	1	
K24	HA106J0664	碰块弯杆接头螺钉	Set screw	2	2	SM5/16″×18
K25	H5309I8001	膝控碰块弯杆	Knee lifter bell crank	1	1	
K26	HA106J0667	碰块架螺钉	Set screw	1	1	SM15/64″×28
K27	HA106J0666	碰块架	Bracket for knee lifter plate	1	1	
K28	HA106J0665	膝控碰块	Knee lifter plate	1	1	
K29	HA106J0668	碰块垫	Pad for knee lifter plate	1	1	
K30	HA104J0657	膝控复位弹簧	Backspring for knee lifter	1	1	
K31	HA110D0672	膝控限位架螺钉	Screw	1	1	
K32	HA104J6510	调节螺母	Lock nut	2	2	
K33	HA104J0659	膝控限位调节螺钉	Adjusting screw	2	2	
K34	HA104J0658	膝控限位架	Knee lifter stop bracket	1	1	
K35	HFN9157101	调速器组件	Governor assy	1	1	
K36	HFN9167101	安装木螺钉(3只)	Wood screw(3)	1	1	
K37	HFN9177101	踏板连杆组件	Pedal connecting rod assy	1	1	

WWW.ISKASIUVIMUI.LT

DY-850-8/851-8(薄料)专用件

Parts for DY-850-8/DY-851-8

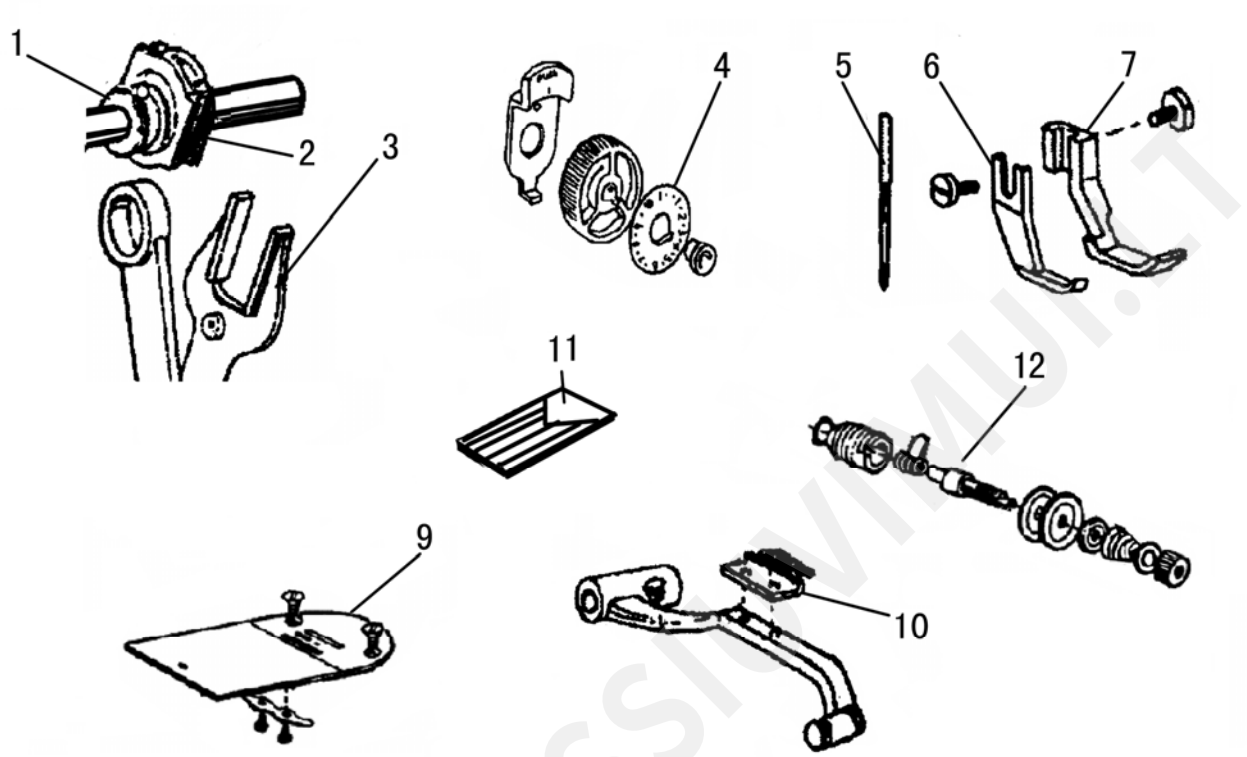

序号 Fig.No.	样本编号 Part No.	名　　称	Description	DY-850-8	DY-851-8	备　注 Remarks
1	HA3411D108	送布凸轮	Feed and feed lifting eccentric	1	1	
2	HA3411D208	牙叉滑块	Slider	1	1	
3	H3800D2020	牙叉	Feed forked connection	1	1	
4	HA720F0684	标盘面板 (4)	Plate for stitch length	1	1	
5		机针 DP×17 #14	Needle	1	1	
6	H2900I2020	外压脚	Out presser	1	1	
7	HEH3048001	内压脚	Presser loot complete	1	1	
9	H2900B2030	针板	Needle plate	1	1	
10	H2900G2010	送布牙	Feed dog	1	1	
11		机针 DP×17 #14	Needle	4	4	
12	HA310B0070	夹线组件	Thread tension assy	1	1	

WWW.VISKASSEWING.IT

上 海 标 准 海 菱 缝 制 机 械 有 限 公 司

SHANGHAI BIAOZHUN HAILING SEWING MACHINERY CO., LTD.

地址: 上海市松江区书林路850号

ADD: NO.850 Shulin Road, Songjiang District Shanghai, P.R.China

邮编: 201612

Zip Code: 201612

内销业务：电话: 86-21-64061284 传真: 86-21-64462799

零件服务：电话: 86-21-64851424 传真: 86-21-64069792

Overseas Business: TEL: 86-21-64853303 FAX: 86-21-64854304

E-mail:sales@highlead.com.cn http://www.highlead.com.cn

制造商保留因技术改进而更改内容的权利，恕不另行通知

The description covered in this manual is subject to change for improvement of the commodity without notice

2017.11 印制 Printed

WWW.VISKASSIUVIMUI.LT